CONTENTS

Section	*Page No.*
INTRODUCTION	**1**
PURPOSE OF MACHINE	**2**
MACHINE DIMENSIONS & SPECIFICATIONS	**2**
PARTS LOCATION DIAGRAMS	**3 & 4**
SAFE WORKING	**5**
Operator's Personal Protective Equipment Required	5
Basic Shredding Safety	5
General Safety Matters - Do's and Dont's	6
Noise Test	7
OPERATING INSTRUCTIONS	**8**
Safe Transportation	8
Hitching onto the Tow Ball	8
Unhitching the Shredder	8
Delivery	9
Operator's Personal Protective Equipment Required	9
Manual Controls	9
Auto Controls	10
Daily Checks Before Starting	10
Engine Controls	10
Starting the Engine	10
Controlling the Engine Speed	10
Stopping the Engine	11
Before Using the Shredder	11
Starting to Shred	11
Discharge Controls	11
Hydraulic Oil Lever Indicator	12
Fuel Level Indicator	12
Shredding	12
Blockages	12
SERVICE INSTRUCTIONS	**13**
Service Schedule	14
Safe Maintenance	15
Spares	15
Safe Lifting of the Shredder	15
Change Hydraulic Oil and Filter	16
Copper Ease Safety Information	16
Battery Removal and Maintenance	16
Battery Safety Information	16
Check Fittings	18
Check Free Rotation of Rotor Drum and Hammers	18
Change Hammers	19
Check Hoses	19
Grease Drum Bearings	20
Tension Drive Belts	20
Grease the Roller Box Slide	21
Grease the Roller Spline and Bearing	21
Grease Jack Stand	21
Grease the Discharge Flange	21
Engine Manufacturer's Handbook	21
WARRANTY STATEMENT	**22**
EC DECLARATION OF CONFORMITY CERTIFICATE	**23**
IDENTIFICATION PLATES	**24**
DECALS	**25 & 26**
ELECTRICAL DETAIL	**27**
HYDRAULIC LAYOUT	**28**
CIRCUIT DIAGRAM	**29**
PARTS LISTS	**30 - 45**

INTRODUCTION

Thank you for choosing this Timberwolf shredder. Timberwolf shredders are designed to give safe and dependable service if operated according to the instructions.

Before using your new shredder, please take time to read this manual which contains IMPORTANT HEALTH AND SAFETY INFORMATION and explains the shredder controls. Failure to do so could result in:

- personal injury
- equipment damage
- damage to property
- a member of the general public becoming injured

This manual covers the operation and maintenance of the Timberwolf S426TDHB. All information in this manual is based on the latest product information available at the time.

All the information you need to operate the machine safely and effectively is contained within pages 2 to 12. Ensure that all operators are **properly trained** for operating this machine, especially with regard to **safe working practices**.

Timberwolf's policy of constantly improving their products may involve major or minor changes to the shredders or their accessories. Timberwolf reserves the right to make changes at any time without notice and without incurring any obligation.

Due to improvements in design and performance during production there may be, in some cases, minor discrepancies between the actual shredder and the text in this manual.

The manual should be considered a permanent part of the machine and should remain with it if the machine is resold.

Always follow safe operating and maintenance practices

CAUTION or WARNING

Be aware of this symbol and where shown, carefully follow the instructions.

This caution symbol indicates important safety messages in this manual. When you see this symbol, be alert to the possibility of injury to yourself or others, and carefully read the message that follows.

PURPOSE OF MACHINE

The Timberwolf S426TDHBis a high speed, heavy duty professional shredder. It is designed to shred general green waste (brash, prunings, hedge trimmings, Leylandii, Christmas trees, rootballs, etc.),brushwood up to 150mm (6”), pallets, domestic doors, wooden and plastic window frames (all pre-cut to fit feed aperture), contaminated timber, chipboard, MDF, packaging materials, uPVC plastic, cardboard, wooden furniture, fence posts and similar items. The machine will tolerate drinks cans, plastic bottles, stones, rocks and concrete (up to fist size), nails, metal door furniture, glass bottles and similar items.

WARNING - LIMITATIONS ON MATERIALS.

To properly control the speed of material entering the shredder chamber, the machine relies on the large feed roller to grip the material. The feed roller can grip material down to 15mm in diameter. The machine will not tolerate or process items such as tyres, mattresses, heavy duty plastic containers (used for oils, chemicals, etc.), carpets, reinforced concrete, metallic items exceeding lightweight domestic door furniture, commercial plastic gas pipe, alkathene water pipe, metal reinforced drainage/irrigation pipe, baler twine, rope, metal banding, computer hard drives (which contain magnets) and any similar objects to the above.

NOTE: When materials are corrosive they may attack and degrade the individual components. It is essential that the unit be thoroughly cleaned down after shredding anything that may contain materials of an aggressive nature.

Ejection of material – **Warning!** The S426TDHB shredder ejects material at high speed. Ensure there is an adequate safety zone and that ejected material is aimed away from operators into a safe area, i.e. an enclosure or container with a back stop (i.e. wall) behind it to prevent ejected material from leaving the work area and causing injury and damage. If loading into a truck or trailer, ensure the structure is strong enough to cope with the impact from ejected material.

DIMENSIONS

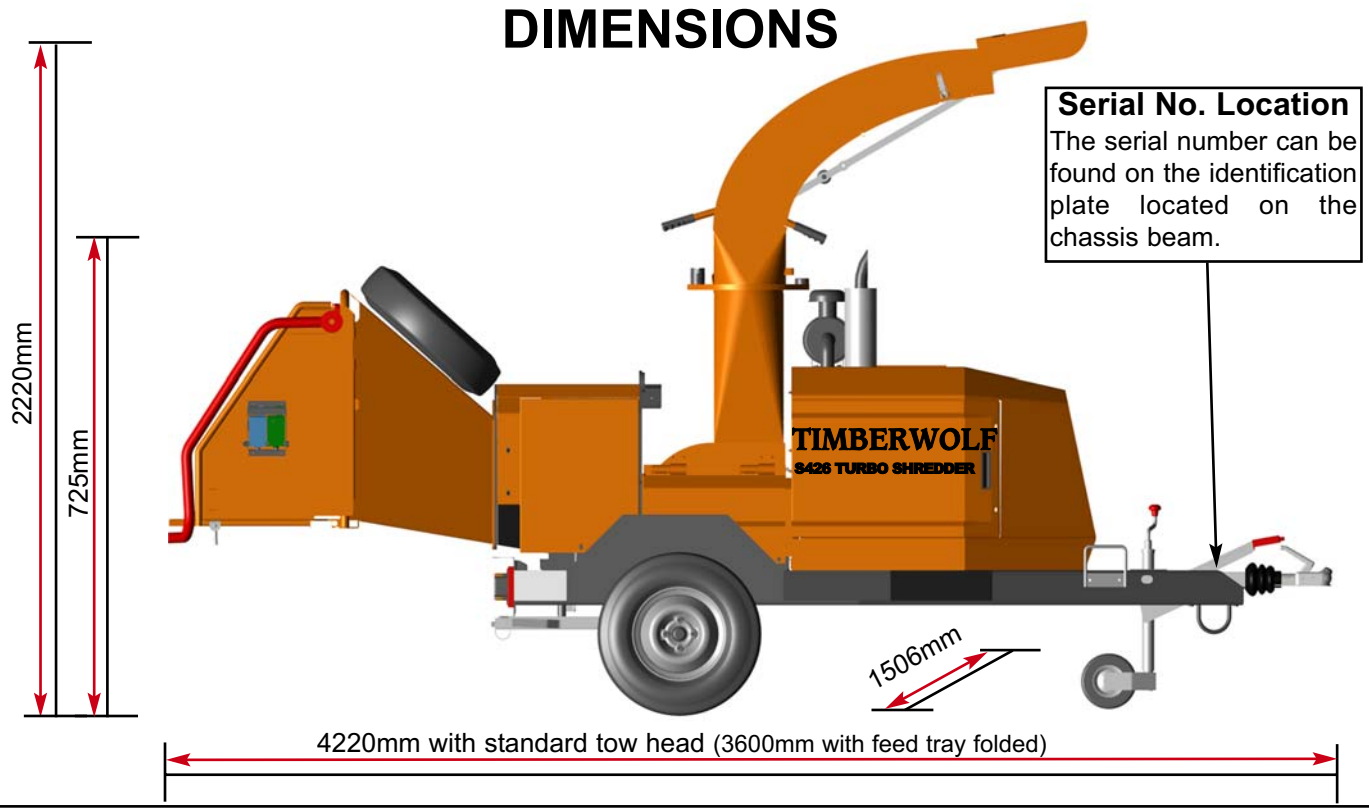

Serial No. Location
The serial number can be found on the identification plate located on the chassis beam.

TIMBERWOLF S426TDHB SPECIFICATION

Engine type	*Kubota 4-cylinder turbo diesel*	Maximum diameter material	*225mm (9")*
Maximum power	*33kW (45hp)*	Fuel capacity	*33 litres*
Cooling method	*Water cooled*	Hydraulic oil capacity	*15 litres*
Overall weight	*1350kg*	Material processing capacity	*up to 3 tonnes/hr*
Starting method	*Electric*	Fuel type	*Diesel*
Roller feed	*Hydraulic motor*		

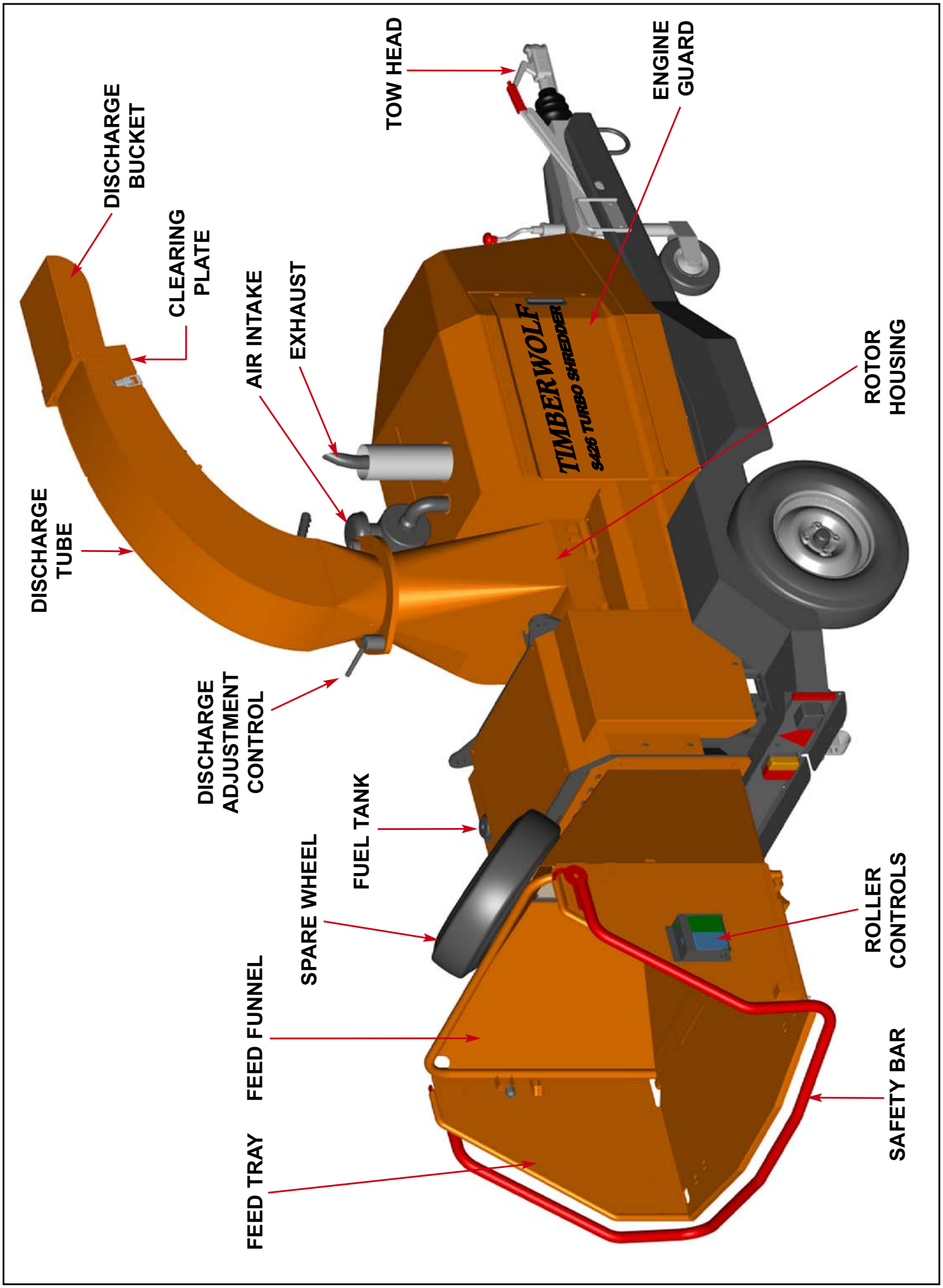
DISCHARGE BUCKET
CLEARING PLATE
DISCHARGE TUBE
DISCHARGE ADJUSTMENT CONTROL
FEED TRAY
FEED FUNNEL
SPARE WHEEL
FUEL TANK
AIR INTAKE
EXHAUST
TOW HEAD
TIMBERWOLF
S426 TURBO SHREDDER
ENGINE GUARD
ROTOR HOUSING
ROLLER CONTROLS
SAFETY BAR

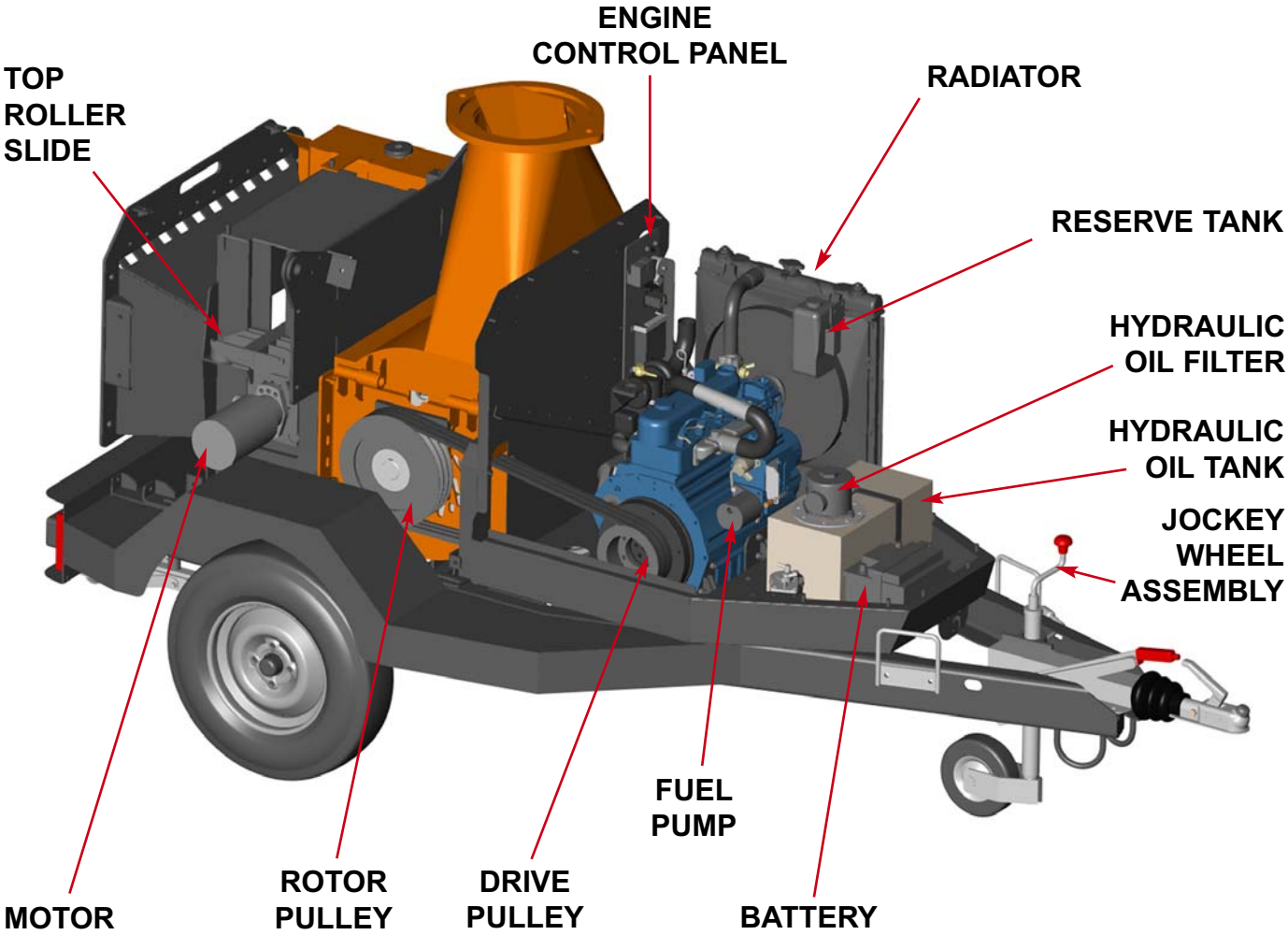
ENGINE
CONTROL PANEL
TOP
ROLLER
SLIDE
RADIATOR
RESERVE TANK
HYDRAULIC
OIL FILTER
HYDRAULIC
OIL TANK
JOCKEY
WHEEL
ASSEMBLY
FUEL
PUMP
MOTOR
ROTOR
PULLEY
DRIVE
PULLEY
BATTERY

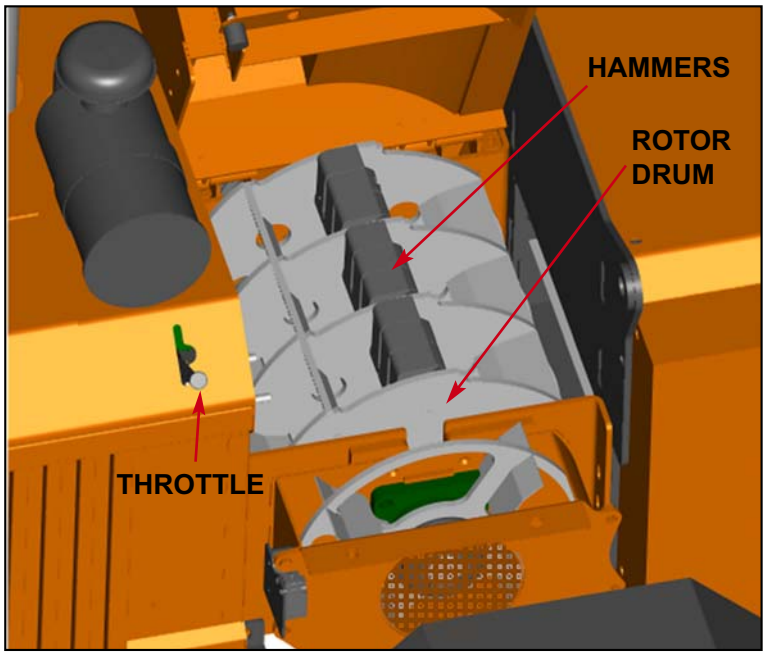
HAMMERS
ROTOR
DRUM
THROTTLE

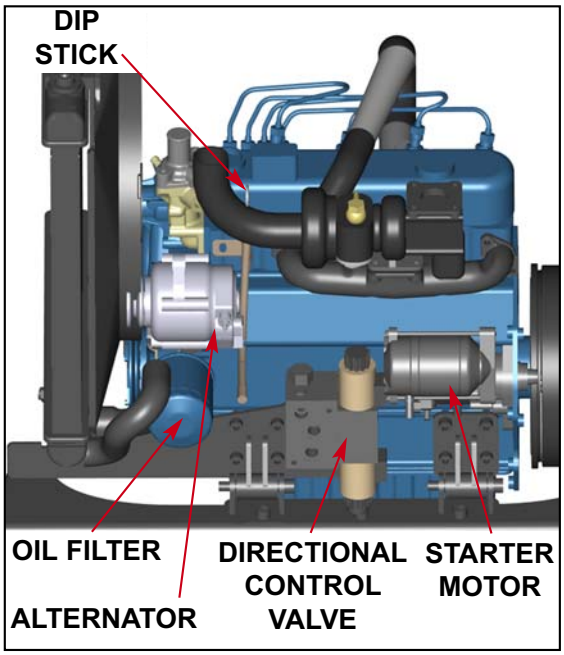
DIP
STICK
OIL FILTER
ALTERNATOR
DIRECTIONAL
CONTROL
VALVE
STARTER
MOTOR

WARNING

The shredder will feed material through on its own. To do this, it relies on the hammers to be free to swing. DO NOT put bricks, large stones, string, carpet, tyres or metal into the shredder.

OPERATOR'S PERSONAL PROTECTIVE EQUIPMENT REQUIRED

Chainsaw safety helmet fitted with mesh visor and recommended ear defenders to the appropriate specifications.

Work gloves with elasticated wrist.

Steel toe cap safety boots.

Close fitting heavy-duty non-snag clothing.

Face mask if appropriate.

DO NOT
wear rings, bracelets, watches, jewellery or any other items that could be caught in the material and draw you into the shredder.

BASIC SHREDDING SAFETY

The operator should be aware of the following points:

- MAINTAIN A SAFETY EXCLUSION ZONE around the shredder of at least 10 metres for the general public or employees without adequate protection. Due to the nature of material being shredded and the distance/velocity of discharge, the exclusion zone must be extended to 20 metres in front of the discharge tube exit. Use hazard tape to identify this working area and keep it clear from debris build up. Shredded material should be ejected away from any area the general public have access to.

- HAZARDOUS MATERIAL - Some species of trees and bushes are poisonous. The shredding action can produce vapour, spray and dust that can irritate the skin. This may lead to respiratory problems or even cause serious poisoning. Check the material to be shredded before you start. Avoid confined spaces and use a facemask if necessary.

- BE AWARE when the shredder is processing material that is an awkward shape. The material can move from side to side in the funnel with great force. If the material extends beyond the funnel, the brash may push you to one side causing danger.

- BE AWARE that the shredder can eject material out of the feed funnel with considerable force. Always wear full head and face protection.

- ALWAYS work on the side of the machine furthest from any local danger, e.g. not road side.

GENERAL SAFETY MATTERS

DO'S AND DON'TS

ALWAYS stop the shredder engine before making any adjustments, refuelling or cleaning.

ALWAYS check machine has stopped rotating and remove shredder ignition key before maintenance of any kind, or whenever the machine is to be left unattended.

ALWAYS check machine is well supported and cannot move.

ALWAYS run with the engine set to maximum speed.

ALWAYS check (visually) for fluid leaks.

ALWAYS take regular breaks. Wearing personal protective equipment for long periods can be tiring and hot.

ALWAYS keep hands, feet and clothing out of feed opening, discharge and moving parts.

ALWAYS use the next piece of material or a push stick to push in short pieces. Under no circumstances should you reach into the funnel.

ALWAYS keep the operating area clear of people, animals and children.

ALWAYS keep the operating area clear from debris build up.

ALWAYS keep clear of the chip discharge tube. Foreign objects may be ejected with great force.

ALWAYS ensure protective guarding is in place before commencing work. Failure to do so may result in personal injury or loss of life.

ALWAYS use shredder in a well ventilated area - exhaust fumes are dangerous.

DO NOT use shredder unless available light is sufficient to see clearly.

DO NOT use or attempt to start the shredder without the feed funnel, belt guard, guards and discharge unit securely in place.

DO NOT start the shredder running unless properly guarded.

DO NOT stand directly in front of the feed funnel when using the shredder. Stand to one side.

DO NOT allow -

BRICKS

STRING

METAL

CLOTH OR CARPET

RUBBER

LARGE STONES

- to enter the machine, as damage is likely.

DO NOT smoke when refuelling. Petrol/diesel fuel is explosive!

DO NOT let anyone who has not received instruction operate the machine.

DO NOT climb on the machine at any time.

DO NOT handle material that is partially engaged in the machine.

DO NOT touch any exposed wiring while machine is running.

DO NOT use the shredder inside buildings.

NOISE TEST

MACHINE:	TW S426TDHB
NOTES:	Tested Shredding 120 mm x 120 mm Corsican Pine 1.5m in length

Noise levels above 80dB (A) will be experienced at the working position. Wear ear protection at all times to prevent possible damage to hearing. All persons within a 4 metre radius must also wear good quality ear protection.

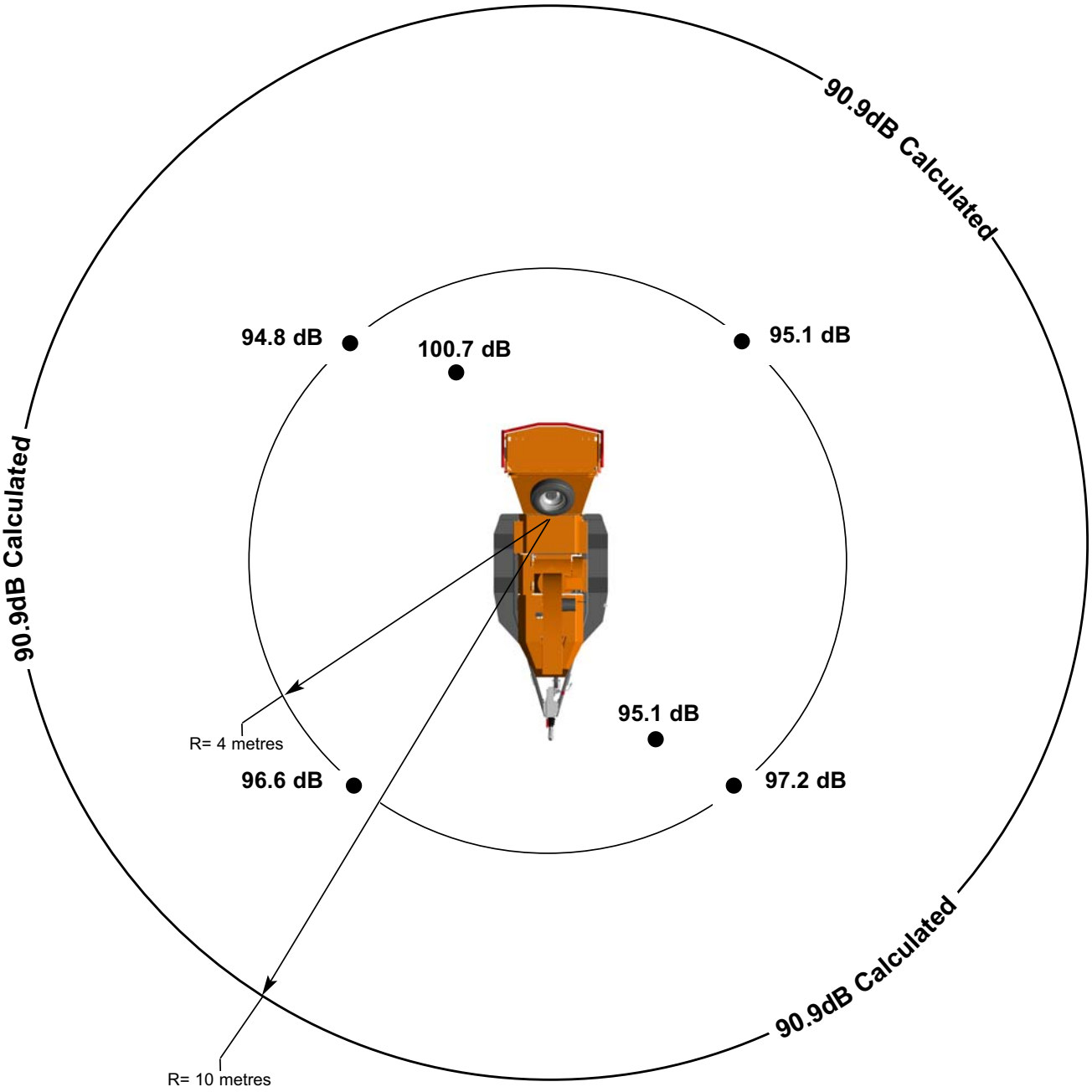

Guaranteed Sound Power: 120dB (A)

As required by Supply of Machinery (safety) regulations of 2008.

SAFE TRANSPORTATION

WARNING

DO NOT RIDE ON THE SHREDDER WHEN IT IS BEING TOWED.

- WHEN towing a shredder the maximum speed limit is 60 mph.
- ON rough or bumpy road surfaces reduce speed accordingly to protect your machine from unnecessary vibration.
- WHEN towing off road be aware of objects that may catch the shredder undergear.
- WHEN towing off road ensure inclination is not excessive.
- AVOID excessively pot holed ground.
- WHEN reversing the shredder the short wheel base will react quickly to steering.
- ALWAYS check the discharge is tight before moving.
- KEEP tyre pressures inflated to 2.9 bar or 42 psi.
- CHECK wheel nuts are tightened to 90Nm or 65 lbs ft.
- CLEAR loose chippings and debris from the machine before departing.
- ENSURE the feed funnel is closed and the catch is properly engaged before departing.

HITCHING ONTO THE TOW BALL

- CHECK the ball head is well greased.
- WIND jockey wheel assembly anticlockwise until the tow head is above the height of the ball hitch on the vehicle.
- REVERSE the vehicle so the ball hitch is directly below the tow head.
- ATTACH the breakaway cable to a strong point on the vehicle, not the ball hitch.
- GRASP handle on tow head and push back catch with thumb.
- WIND the jockey wheel assembly clockwise, to lower the tow head onto the ball hitch.
- RELEASE handle and continue to wind jockey wheel clockwise. The tow head should snap into place on the ball hitch. If it doesn't, repeat previous 2 steps.
- WIND jockey wheel up until fully retracted and the jockey wheel frame is seated in its notch on the stem. The shredder weight should be fully on the vehicle.
- RELEASE the jockey wheel clamp and slide the jockey wheel assembly fully up.
- TIGHTEN clamp on the jockey wheel assembly.
- CONNECT electrical plug to socket on rear of towing vehicle and check operation of all the trailer and vehicle lights.
- INSERT the lock for security.
- THE shredder is now properly attached to the vehicle.

UNHITCHING THE SHREDDER

- APPLY handbrake.
- DISCONNECT the electrical cable from the vehicle socket.
- RELEASE breakaway cable.
- RELEASE the jockey wheel assembly clamp.
- LOWER the jockey wheel assembly fully.
- RETIGHTEN the jockey wheel assembly clamp.
- WIND the jockey wheel assembly anticlockwise until it starts to take the weight of the shredder.
- GRASP the handle and release the catch with your thumb.
- CONTINUE to wind the jockey wheel anticlockwise. This should lift the tow head clear of the ball hitch.
- DRIVE the vehicle clear of the shredder.
- WIND the jockey wheel assembly to a suitable point where the shredder is level.
- THE shredder is now fully detached from the vehicle.

DELIVERY

All Timberwolf S426TDHB machines have a full pre - delivery inspection before leaving the factory and are ready to use. Read and understand this instruction manual before attempting to operate the shredder. In particular, read pages 5-7 which contain important health and safety information and advice.

OPERATOR'S PERSONAL PROTECTIVE EQUIPMENT REQUIRED

- CHAINSAW safety helmet fitted with visor and recommended ear defenders to an appropriate specification.
- HEAVY-DUTY work gloves with elasticated wrist.
- CLOSE - FITTING heavy-duty non-snag clothing.
- SAFETY footwear.
- FACE MASK (if appropriate).

See page 5 for more detailed information.

MANUAL CONTROLS

Roller control boxes- two control boxes are located on either side of the feed tray. Their function is to control the feed roller that draw material into the machine. ***They do not control the main rotor.***

RED SAFETY BAR = This is the large red bar that surrounds the feed tray and side of the feed funnel. The bar is spring loaded and connected to a switch that will interrupt the power to the roller. The switch is designed so that it only activates if the bar is pushed to the limit of its travel. The roller will stop instantly, but can be made to turn again by pressing either the GREEN FEED or BLUE REVERSE control buttons.

RED SAFETY BAR TEST

To ensure the safety bar is always operational it must be activated once before each work session. The rollers will not function until the bar is activated. This procedure must be repeated each time the ignition is switched off.

WARNING

DO NOT remove, jam, disable, bypass, override or otherwise impede the effectiveness of the red safety bar.

GREEN BUTTON = Forward feed - Push the button once - this activates the roller and will allow you to start shredding (if the rotor speed is high enough).

BLUE BUTTON = Reverse feed - allows you to back material out of the roller. The roller will only turn in reverse as long as you keep pressing the button.

Control Box Diagram

There are two control boxes, located on either side of the feed tray.

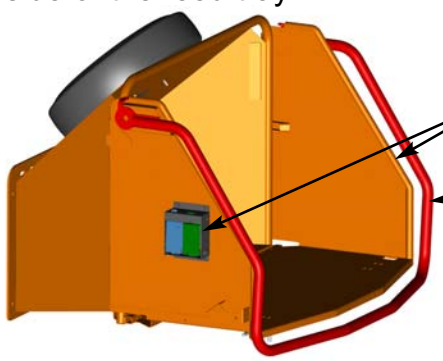

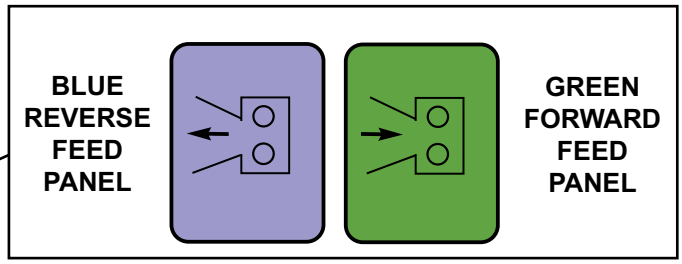

RED SAFETY BAR

Do not rely on the red bar to keep the roller stationary if it is necessary to clear or touch the roller. Always switch off the machine and remove ignition key before approaching the roller.

AUTO CONTROLS

The engine management unit controls the feed rate of the material going into the shredding chamber. If the engine speed is below the predetermined level, the engine management unit will not allow the feed roller to work in the forward “infeed” direction, until the rotor speed rises above the predetermined level. At this point, the feed roller will start turning without warning. The reverse function will work at any engine speed.

DAILY CHECKS BEFORE STARTING

- LOCATE the machine on firm level ground.
- CHECK machine is well supported and cannot move.
- CHECK jack stand is lowered and secure.
- CHECK all guards are fitted and secure.
- CHECK the discharge unit is in place and fastened securely.
- CHECK discharge tube is pointing in a safe direction.
- CHECK the feed funnel to ensure no objects are inside.
- CHECK feed tray is in up position - to prevent people reaching the roller.
- CHECK for free rotation of rotor drum and hammers (see instructions on page 18).
- CHECK controls as described below.
- CHECK (visually) for fluid leaks.
- CHECK fuel and hydraulic oil levels.

For parts location see diagrams on pages 3 & 4.

ENGINE CONTROLS

The engine controls are in two locations. The engine ignition is on the control panel in the centre of the machine, and the throttle lever is on the bonnet (see parts locator on page 3).

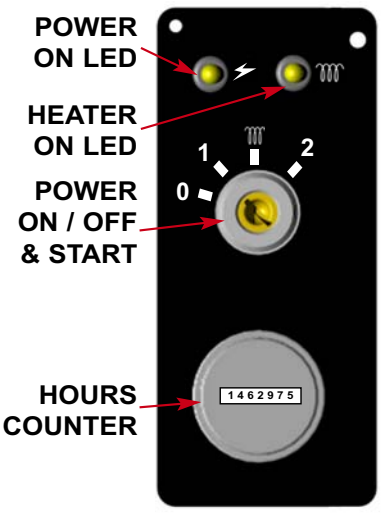

STARTING THE ENGINE

- INSERT key.Turn to heat.
- HEATER LED comes on.
- WAIT FOR HEATER LED TO GO OUT.
- TURN key to start position until it fires.
- RELEASE key.

If the engine fails to start after 10 seconds leave for 1 minute and try again.

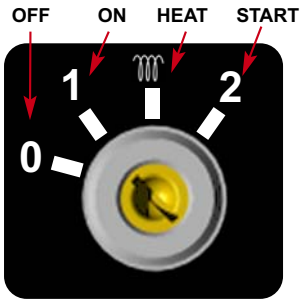

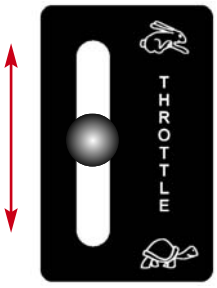

CONTROLLING ENGINE SPEED

The engine has two throttle settings, idle and fast. These are controlled by the throttle lever on the bonnet. Moving the lever towards the ‘Hare’ on the pictogram will increase engine speed while moving it towards the ‘Tortoise’ will decrease the engine speed.

STOPPING THE ENGINE

- MOVE the throttle lever to the 'Tortoise' to reduce the engine speed to idle.
- LEAVE the engine running for 1 minute.
- TURN the power switch to position 0. The engine should stop after a few seconds.
- AT the end of operations allow sufficient time for all shredded material to be ejected from the discharge before switching off.

BEFORE USING THE SHREDDER

IT IS ESSENTIAL TO CARRY OUT THE FOLLOWING TESTS to check safety equipment - this sequence of tests will only take a few seconds to carry out. We recommend that these tests are carried out daily. Observing the function as described will confirm that the safety circuits are working correctly. This is also a good opportunity to remind all operators of the control and emergency stop systems.

WITH THE ENGINE RUNNING AT FULL SPEED

1 → **2** → **3**

PRESS THE GREEN BUTTON
THE ROLLER SHOULD TURN FORWARDS

PRESS THE RED SAFETY BAR
THE ROLLER SHOULD STOP

PRESS THE BLUE BUTTON
THE ROLLER SHOULD TURN BACKWARDS ONLY WHILE THE BUTTON IS PRESSED

STARTING TO SHRED

WARNING

Do not use or attempt to start the shredder without the protective guarding and discharge unit securely in place. Failure to do so may result in personal injury or loss of life.

- CHECK that shredder is running smoothly.
- RELEASE the catches on the feed tray and lower.
- PRESS the green control button. The roller will commence turning.
- STAND to one side of the feed funnel.
- PROCEED to feed material into the feed funnel.
- AT the end of operations allow sufficient time for all shredded material to be ejected from the discharge before switching off.

DISCHARGE CONTROLS

Controlling the discharge is an essential part of safe working.

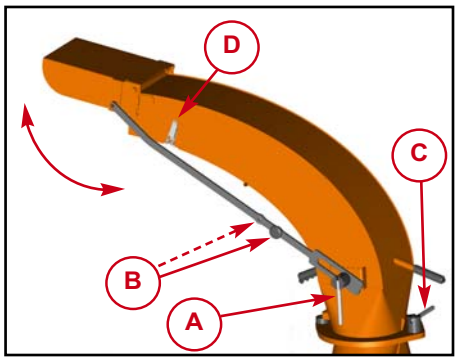

ROTATION

- Slacken nut 'C' using integral handle, rotate tube, retighten nut.

BUCKET ANGLE

- Adjust the bucket to the desired angle by loosening clamp 'A' and pushing/pulling handle 'B'. When angle achieved retighten clamp 'A'. ***NOTE: Handle 'B' can be positioned in either upper or lower holes according to operator preference.***

CLEARING PLATE

- Unclip catches 'D' on both sides to open the clearing plate.

HYDRAULIC OIL LEVEL INDICATOR

This can be viewed through the wall of the tank. Maximum and minimum marks are provided.

FUEL LEVEL INDICATOR

The fuel level can be seen through the tube fitted to the side of the tank.

SHREDDING

WARNING - LIMITATIONS ON MATERIALS.

To properly control the speed of material entering the shredder chamber, the machine relies on the large feed roller to grip the material. The feed roller can grip material down to 15mm in diameter. The machine will not tolerate or process items such as tyres, mattresses, heavy duty plastic containers (used for oils, chemicals, etc.), carpets, reinforced concrete, metallic items exceeding lightweight domestic door furniture, commercial plastic gas pipe, alkathene water pipe, metal reinforced drainage/irrigation pipe, baler twine, rope, metal banding, computer hard drives (which contain magnets) and any similar objects to the above.

NOTE: When materials are corrosive they may attack and degrade the individual components. It is essential that the unit be thoroughly cleaned down after shredding anything that may contain materials of an aggressive nature.

Ejection of material – **Warning!** The S426TDHB shredder ejects material at high speed. Ensure there is an adequate safety zone and that ejected material is aimed away from operators into a safe area, i.e. an enclosure or container with a back stop (i.e. wall) behind it to prevent ejected material from leaving the work area and causing injury and damage. If loading into a truck or trailer, ensure the structure is strong enough to cope with the impact from ejected material.

BLOCKAGES

Always be aware that what you are putting into the shredder must come out. If the material stops coming out of the discharge tube but the shredder is taking material in - STOP IMMEDIATELY. Continuing to feed material into a blocked machine may cause damage and will make it difficult to clear. Two areas of the machine can become blocked - the discharge tube and the rotor housing. To clear a blockage proceed as follows:

- STOP the engine and remove the keys.
- REMOVE the two rotor housing securing nuts and open the rotor housing until it rests against the rubber stop. **WARNING!** Ensure the weight of the discharge tube is fully supported whilst opening the rotor housing, to avoid injury and damage.
- REMOVE any blockage from the discharge tube, ensuring that it is clear along its entire length.
- WEARING gloves, reach into the rotor housing and remove the material causing the blockage, including any material that may have also entered the side fan casing. **WARNING!** Beware of turning the rotor whilst clearing a blockage, as this could lead to injury.
- CLOSE the rotor housing and replace and tighten the two securing nuts. **WARNING!** Ensure the weight of the discharge tube is fully supported whilst lowering the rotor housing, to avoid injury and damage.
- RESTART the engine and increase to full throttle. Allow sufficient time for the machine to clear any residual material before recommencing work.

Continuing to feed the shredder with material once it has become blocked will cause the shredder to compact material in the rotor housing and discharge chute and it will be difficult and time consuming to clear.

AVOID THIS SITUATION - WATCH THE DISCHARGE TUBE AT ALL TIMES.

THE FOLLOWING PAGES DETAIL ONLY *BASIC* MAINTENANCE GUIDELINES SPECIFIC TO YOUR SHREDDER.

THIS IS NOT A WORKSHOP MANUAL.

THE FOLLOWING GUIDELINES ARE NOT EXHAUSTIVE AND DO NOT EXTEND TO GENERALLY ACCEPTED STANDARDS OF ENGINEERING/MECHANICAL MAINTENANCE THAT SHOULD BE APPLIED TO ANY PIECE OF MECHANICAL EQUIPMENT AND THE CHASSIS TO WHICH IT IS MOUNTED.

AUTHORISED TIMBERWOLF SERVICE AGENTS ARE FULLY TRAINED IN ALL ASPECTS OF TOTAL SERVICE AND MAINTENANCE OF TIMBERWOLF SHREDDER. YOU ARE STRONGLY ADVISED TO TAKE YOUR SHREDDER TO AN AUTHORISED AGENT FOR ALL BUT THE MOST ROUTINE MAINTENANCE AND CHECKS.

TIMBERWOLF ACCEPTS NO RESPONSIBILITY FOR THE FAILURE OF THE OWNER/USER OF TIMBERWOLF SHREDDERS TO RECOGNISE GENERALLY ACCEPTED STANDARDS OF ENGINEERING/MECHANICAL MAINTENANCE AND APPLY THEM THROUGHOUT THE MACHINE.

THE FAILURE TO APPLY GENERALLY ACCEPTED STANDARDS OF MAINTENANCE, OR THE PERFORMANCE OF INAPPROPRIATE MAINTENANCE, MAY INVALIDATE WARRANTY IN WHOLE OR IN PART.

PLEASE REFER TO YOUR AUTHORISED TIMBERWOLF SERVICE AGENT FOR SERVICE AND MAINTENANCE.

SERVICE SCHEDULE

WARNING

Always immobilise the machine by stopping the engine, removing the ignition key and disconnecting the battery before undertaking any maintenance work.

SERVICE SCHEDULE	Daily Check	50 Hours	100 Hours	500 Hours	1 Year
Check water.	✓				
Check engine oil - top up if necessary (10W-30).	✓				
Check for engine oil / hydraulic oil leaks.	✓				
Check tyre pressure is 2.9 Bar (42 psi).	✓				
Check feed funnel, feed roller cover, access covers, engine covers and discharge unit are securely fitted.	✓				
Check for free rotation of rotor drum and hammers.	✓				
Check air intake is clear.	✓				
Clean air filter element.	DEPENDING ON WORKING ENVIRONMENT				
Grease the drum bearings.	GREASE DAILY OR AS REQUIRED WITH INFREQUENT USE - SEE PAGE 20				
Grease the roller box slides.		✓	OR AS REQUIRED - SEE PAGE 21		
Grease the roller spline and bearing.		✓	OR AS REQUIRED - SEE PAGE 21		
Check for tightness all nuts, bolts and fastenings making sure nothing has worked loose.		✓			
Check tension of main drive belts (and tension if necessary).		✓			
Grease discharge flange.		✓			
Grease jack stand.			✓		
Check battery electrolyte level.			✓		
Check for loose electrical wiring.			✓		
Replace hydraulic oil filter - every year or 100 hours after service or repair work to the hydraulic system.				✓ *OR*	✓
Replace hydraulic oil.				✓ *OR*	✓
Service tow head/adjustable tow head.	SEE				
Axle maintenance.	MANUFACTURERS				
Road brake maintenance.	SHEET FOR DETAILS				
Replace anvils.	RETURN TO DEALER				
Replace drum bearings.	EVERY 1500 HOURS OR 3 YEARS				

REFER TO YOUR ENGINE SUPPLIERS MANUAL FOR ALL ENGINE MAINTENANCE PROCEDURES.

SAFE MAINTENANCE

ALWAYS IMMOBILISE THE ENGINE BEFORE UNDERTAKING ANY MAINTENANCE WORK ON THE SHREDDER BY REMOVING THE KEY AND DISCONNECTING THE NEGATIVE LEAD AT THE BATTERY.

- HANDLE hammers with extreme caution to avoid injury. Gloves should always be worn when handling the hammers.
- THE drive belts should be connected while changing blades, as this will restrict sudden movement of the drum.
- THE major components of this machine are heavy. Lifting equipment must be used for disassembly.
- CLEAN machines are safer and easier to service.
- AVOID contact with hydraulic oil and fuel.

SAFE LIFTING OF THE SHREDDER

Use slings rated at 2000kg each for the lifting procedure.

Feed two slings through cutouts in the roller box to use tube as a lifting medium (1&2). The length of each rigged sling should be approx. 2200mm. The ideal lifting angle of these slings are (side view) 5.5°.

Pass a third sling under chassis beams around the towhead (3). The length of this rigged sling should be approx. 7200mm. The ideal lifting angle of this sling (side view) is 37.8°.

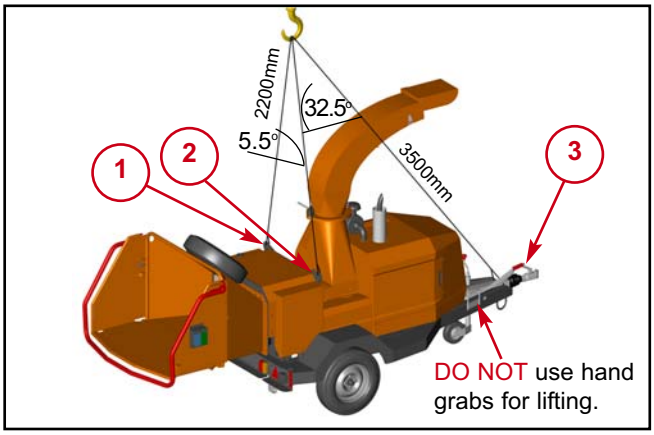

SPARES

Only fit genuine Timberwolf replacement screws and shredder spares. Failure to do so will result in the invalidation of the warranty and may result in damage to the shredder, personal injury or even loss of life.

CHANGE HYDRAULIC OIL AND FILTER

WARNING

Use plastic gloves to keep oil off skin and dispose of the used oil and filter in an ecologically sound way. The oil and filter should be changed once a year or at any time it becomes contaminated. Before starting check that the shredder is standing level and the engine is cool.

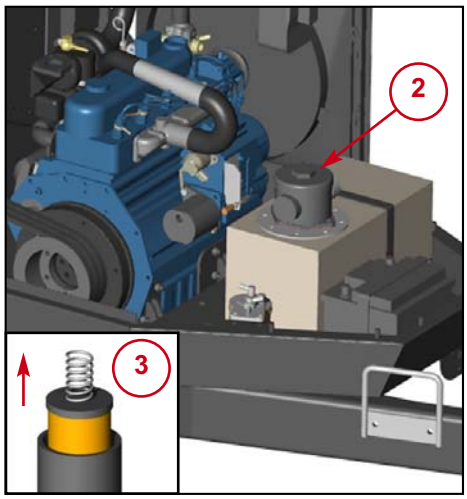

1. Remove the side panel.
2. Remove the black screw cap from the top of the filter housing.
3. Partially remove filter element from inner cup. Leave filter to drain for 15 minutes.
4. Remove filter element from cup when clear of hydraulic oil.
5. Remove drain plug and drain oil into a suitable container.
6. Replace drain plug.
7. Refill with VG 32 hydraulic oil until the level is between the min and max lines marked on the tank (about 15 litres).
8. Refit the filter cup, install a new filter element and refit the black screw cap to the filter housing, ensuring o-ring remains in place.

COPPER EASE SAFETY INFORMATION

Product name: Copper Ease.

Copper Ease contains no hazardous ingredients at or above regulatory disclosure limits, however, safety precautions should be taken when handling (use of oil-resistant gloves and saftey glasses are recommended - respiratory protection is not required). Avoid direct contact with the substance and store in a cool, well ventilated area avoiding sources of ignition, strong oxidising agents and strong acids. Dispose of as normal industial waste (be aware of the possible existance of regional or national regulations regarding disposal), do not discharge into drains or rivers.

In case of fire: in combustion the product emits toxic fumes, extinguish with alcohol or polymer foam, carbon dioxide or dry chemical powder. Wear self-contained breathing apparatus and protective clothing to prevent contact with skin and eyes.

FIRST AID

Skin contact: there may be mild irritation at the site of contact, wash immediately with plenty of soap and water.

Eye contact: there may be irritation and redness, bathe the eye with running water for 15 minutes.

Ingestion: there may be irritation of the throat, do not induce vomiting, wash out mouth with water.

A safety data sheet for this product can be obtained by writing to the manufacturer at the following address: Comma Oil and Chemicals Ltd., Deering Way, Gravesend, Kent DA12 2QX. Tel: 01474 564311, Fax: 01474 333000.

BATTERY REMOVAL AND MAINTENANCE

WARNING

Refer to the battery safety section below.

The battery can be serviced in situ. To remove the battery, first remove the negative battery lead, followed by the positive battery lead, then the battery strap.

When reinstalling the battery apply a small smear of Vaseline to the terminals.

BATTERY SAFETY INFORMATION

WARNING NOTES AND SAFETY REGULATIONS FOR FILLED LEAD-ACID BATTERIES

For safety reasons, wear eye protection when handling a battery.

Keep children away from acid and batteries.

Fires, sparks, naked flames and smoking are prohibited.
-Avoid causing sparks when dealing with cables and electrical equipment, and beware of electrostatic discharges.
-Avoid short circuits, otherwise:

Explosion hazard:
-A highly explosive oxyhydrogen gas mixture is produced when batteries are charged.

Corrosive hazard:
-Battery acid is highly corrosive, therefore:
-Wear protective gloves and eye protection.
-Do not tilt the battery, acid may escape from the vent openings.

First aid:
-Rinse off acid splashed in the eyes immediately for several minutes with clear water! Then consult a doctor immediately.
-Neutralise acid splashes on the skin or clothes immediately with acid neutraliser (soda) or soap suds, and rinse with plenty of water.
-If acid is swallowed, consult a doctor immediately.

Warning notes: The battery case can become brittle, to avoid this:
-Do not store batteries in direct sunlight.
-Discharged batteries may freeze up, therefore store in an area free from frost.

Disposal:
-Dispose of old batteries at an authorised collection point.
-The notes listed under item 1 are to be followed for transport.
-Never dispose of old batteries in household waste.

Pb

BATTERY SAFETY INFORMATION...cont.

1. Storage and transport
- Batteries are filled with acid.
- Always store and transport batteries upright and prevent from tilting so that no acid can escape.
- Store in a cool and dry place.
- Do not remove the protective cap from the positive terminal.
- Run a FIFO (first in-first out)warehouse management system.

2. Initial operation
- The batteries are filled with acid at a density of 1.28g/ml during the manufacturing process and are ready for use.
- Recharge in case of insufficient starting power (cf. section 4).

3. Installation in the vehicle and removal from the vehicle
- Switch off the engine and all electrical equipment.
- When removing, disconnect the negative terminal first.
- Avoid short circuits caused by tools, for example.
- Remove any foreign body from the battery tray, and clamp battery tightly after installation.
- Clean the terminals and clamps, and lubricate slightly with battery grease.
- When installing, first connect the positive terminal, and check the terminal clamps for tight fit.
- After having fitted the battery in the vehicle, remove the protective cap from the positive terminal, and place it on the terminal of the replaced battery in order to prevent short circuits and possible sparks.
- Use parts from the replaced battery, such as the terminal covers, elbows, vent pipe connection and terminal holders (where applicable); use available or supplied filler caps.
- Leave at least one vent open, otherwise there is a danger of explosion. This also applies when old batteries are returned.

4. Charging
- Remove the battery from the vehicle; disconnect the lead of the negative terminal first.
- Ensure good ventilation.
- Use suitable direct current chargers only.
- Connect the positive terminal of the battery to the positive output of the charger. Connect the negative terminal accordingly.
- Switch on the charger only after the battery has been connected, and switch off the charger first after charging has been completed.
- Charging current-recommendation: 1/10 ampere of the battery capacity Ah.
- Use a charger with a constant charging voltage of 14.4V for re-charging.
- If the acid temperature rises above 55° Celsuis, stop charging.
- The battery is fully charged when the charging voltage has stopped rising for two hours.

5. Maintenance
- Keep the battery clean and dry.
- Use a moist anti-static cloth only to wipe the battery, otherwise there is a danger of explosion.
- Do not open the battery.
- Recharge in case of insufficient starting power (cf. section 4).

6. Jump Starting
- Use the standardised jumper cable in compliance with DIN 72553 only, and follow the operating instructions.
- Use batteries of the same nominal voltage only.
- Switch off the engines of both vehicles.
- First connect the two positive terminals (1) and (2), then connect the negative terminal of the charged battery (3) to a metal part (4) of the vehicle requiring assistance away from the battery.

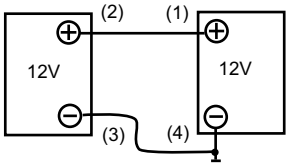

- Start the engine of the vehicle providing assistance, then start the engine of the vehicle requiring assistance for a maximum of 15 seconds.
- Disconnect the cables in reverse sequence (4-3-2-1).

7. Taking the battery out of service
- Charge the battery; store in a cool place or in the vehicle with the negative terminal disconnected.
- Check the battery state of charge at regular intervals, and correct by recharging when necessary (cf. section 4).

CHECK FITTINGS

The TW S426TDHB is subject to large vibrations during the normal course of operation. Consequently there is always a possibility that nuts and bolts will work themselves loose. It is important that periodic checks are made to ensure the security of all fasteners. Fasteners should be tightened using a torque wrench to the settings listed below . ***Uncalibrated torque wrenches can be inaccurate by as much as 25%. It is therefore essential that a calibrated torque wrench is used to achieve the tightening torques listed below.***

	Size	Pitch	Head	Torque lbft	Torque Nm
Rotor Housing Clamp Nuts	M16	Standard	24 mm Hex	40	54
Hyd Motor Retaining Cap Screws	M12	Standard	10 mm Allen Key	60	81
Roller Box Retaining Bolts	M16	Standard	24 mm Hex	105	140
Rotor Shaft Retaining Screws	M12	Standard	10 mm Allen Key	105	140
Funnel Retaining Nuts	M12	Standard	19 mm Hex	60	80
General	M8	Standard	13 mm Hex	17	23
General	M10	Standard	17 mm Hex	34	46
General	M12	Standard	19 mm Hex	60	80

CHECK FREE ROTATION OF ROTOR DRUM AND HAMMERS

WARNING

Wear heavy gloves for the rotor drum/hammer checking operation.

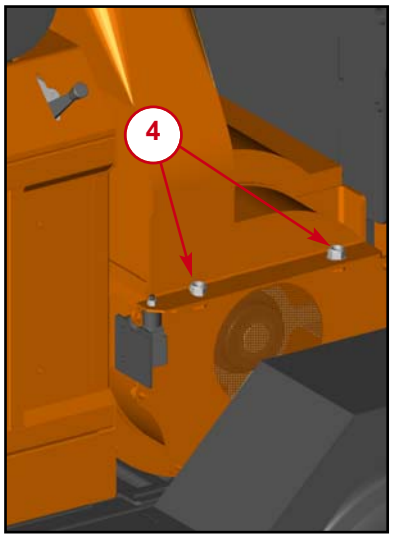

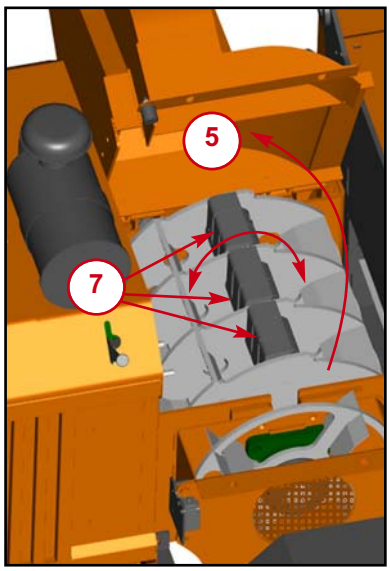

1. Turn off shredder and remove key.
2. Remove the negative battery lead.
3. Turn the discharge tube to point forward of the machine.
4. Using a 24 mm spanner remove the two M16 nuts clamping the drum housing shut.
5. Carefully lift the drum housing until it rests on its stop.
6. Using the paddles to turn the drum, set a bank of hammers at 12 o'clock.
7. Check that each of the 9 hammers in this bank all rotate freely through 360°.
8. Turn the drum to check the second bank of hammers.
9. Check all 9 hammers in second bank also rotate freely through 360°.
10. Lower the top of the drum housing and reinstall the two M16 nuts.
11. Torque these to 65lbft.
12. Re-attach the battery lead.

CHANGE HAMMERS

WARNING

Wear heavy gloves for the hammer changing operation.

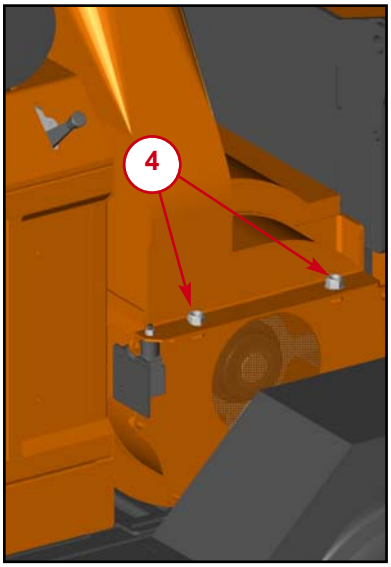

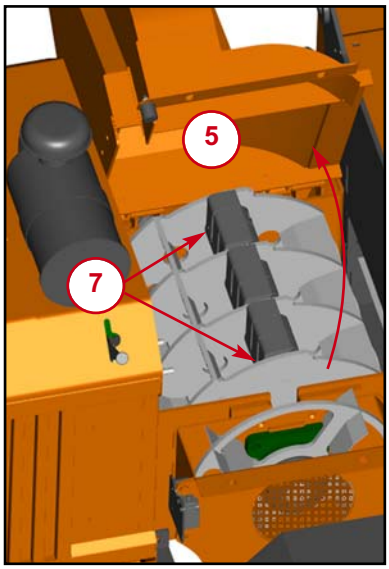

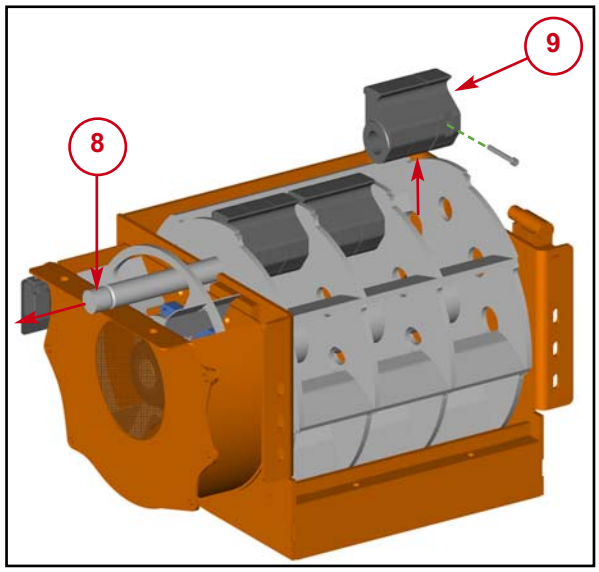

1. Turn off shredder and remove key.
2. Remove the negative battery lead.
3. Turn the discharge tube to point forward of the machine.
4. Using a 24 mm spanner remove the two M16 nuts clamping the drum housing shut.
5. Carefully lift the drum housing until it rests on its stop.
6. Using the paddles to turn the drum, set a bank of hammers at 12 o'clock.
7. With a 6mm hex key undo and remove the bolt in the hammer at each end of the bank of hammers.
8. The shaft can now be withdrawn. The shaft will need to be tapped away from the main drive pulley side.
9. As the shaft is removed the hammers will be released off the shaft. These need to be held and removed as the shaft is withdrawn.
10. The hammer replacement is the reverse of the above with the addition of some copper slip on the hammer retainer bolts. Note the hammer bushes should not be greased or lubricated in any way. Any build up of debris should be removed from both the shaft and the hammer bushes so the hammer can swing freely.
11. Turn the drum to change the second bank of hammers.
12. Lower the top of the drum housing and reinstall the two M16 nuts.
13. Torque these to 65lbft.
14. Re-attach the battery lead.

CHECK HOSES

All the hydraulic hoses should be regularly inspected for chafing and leaks. The hydraulic system is pressurized to 150 Bar (2175 PSI) and thus the equipment containing it must be kept in good condition.

Identify the hoses that run to the top motor. These have the highest chance of damage as they are constantly moving. If any hydraulic components are changed new seals should be installed during reassembly. Fittings should then be retightened.

GREASE THE DRUM BEARINGS

Both bearings need regularly greasing.

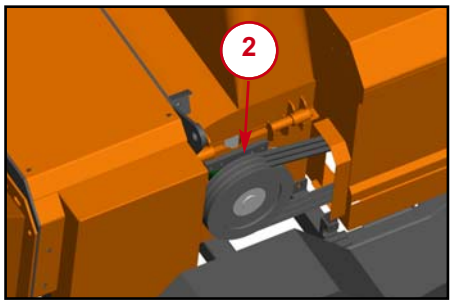

1. Remove the rotor housing guard, situated on the offside of the machine.
2. Apply two pumps of grease to the bearing taking care not to over grease.
3. Refit guard.

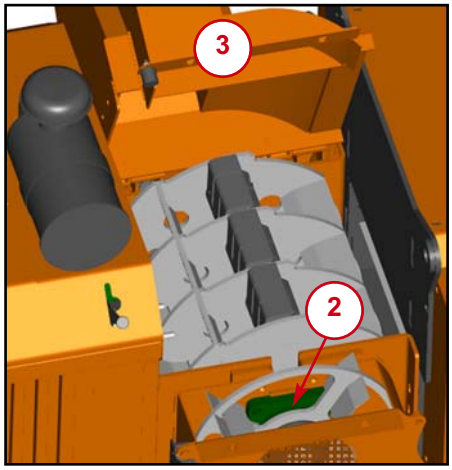

1. Turn the discharge tube to point forward of the machine.
2. Using a 24 mm spanner remove the two M16 nuts clamping the drum housing shut.
3. Carefully lift the drum housing until it rests on its stop.
4. Apply two pumps of grease to the bearing taking care not to over grease.
5. Lower the top of the drum housing and reinstall the two M16 nuts.
6. Torque these to 65lbft.

TENSION DRIVE BELTS

NOTE: There will normally be a rapid drop in tension during run-in period for new belts. When new belts are fitted, check the tension every 2 - 3 hours and adjust until the tension remains constant.

Belt failures due to lack of correct tensioning will not be covered under your Timberwolf warranty.

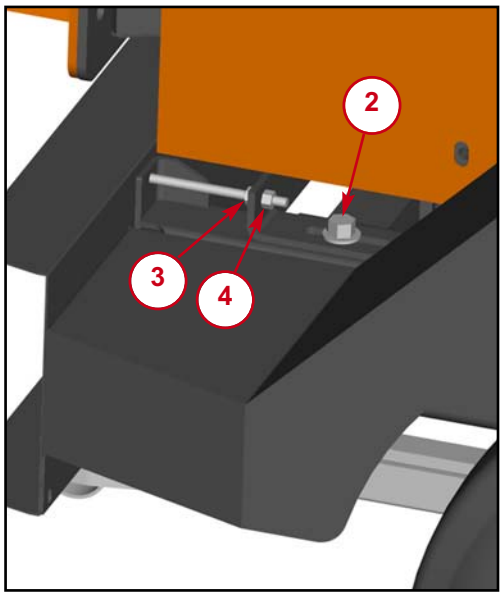

1. Remove the rotor housing guards, (as shown in diagram above).
2. Slacken the six M12 bolts but do not remove (there are three located on each side of the machine).
3. Slacken the M8 tension nut from the adjuster bracket about 5mm on ***both sides*** of roller box.
4. Tension each of the M8 adjuster nuts drawing the drum housing, roller box and funnel away from the engine bay. For instructions on checking belt tension & correct belt tension values, please refer to the Timberwolf V-Belt Tensioning Data Table (page 45).
5. Check the belt tension and repeat as necessary.
6. Once belt tension is correct lock off the M8 nut against the tension bracket.
7. Retighten the six M12 bolts.
8. Refit the belt guard when finished.

GREASE THE ROLLER BOX SLIDES

NOTE: This should be done every 50 hours. In dirty or dusty conditions or during periods of hard work it should be done more frequently. If the slides become dry the top roller will tend to hang up and the pulling-in power of the roller will be much reduced. Excessive wear will ensue.

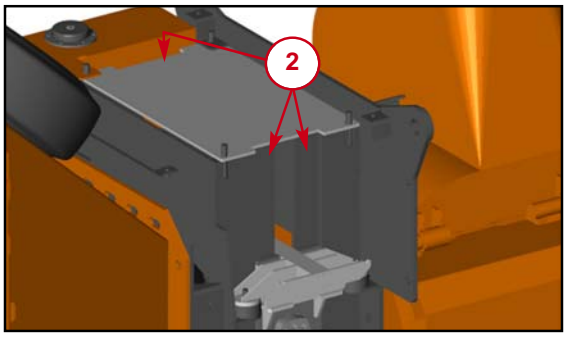

1. Remove the top roller box guard.
2. Remove the nearside roller box guard.
3. Apply multipurpose grease directly to the slide surfaces indicated. **DO NOT USE GRAPHITE BASED GREASE.**
4. Refit both the roller box guards.

GREASE THE ROLLER SPLINE AND BEARING

NOTE: This should be done regularly. In dirty and dusty conditions or during periods of hard work it should be weekly. If the bearings and splines are allowed to run dry premature wear will occur resulting in a breakdown and the need for replacement parts. This failure is not warranty. Early signs of insufficient grease includes squeaking or knocking rollers.

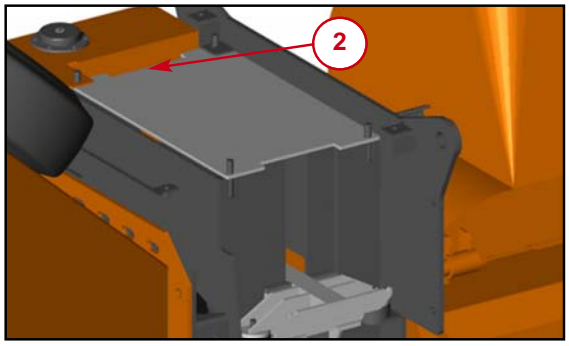

1. Remove the top roller box guard.
2. Locate the grease nipple indicated.
3. Use a pump action grease gun to apply a generous amount of grease to each roller drive. **DO NOT USE GRAPHITE BASED GREASE.**
4. Refit the top roller box guard.

GREASE THE JACK STAND

The jack stand requires intermittent greasing to maintain a smooth operation.

1. Brush off dirt with a stiff brush.
2. Apply grease liberally to screw thread using a brush.
3. Wind mechanism up and down a couple of times to ensure grease has covered all surfaces.

GREASE THE DISCHARGE FLANGE

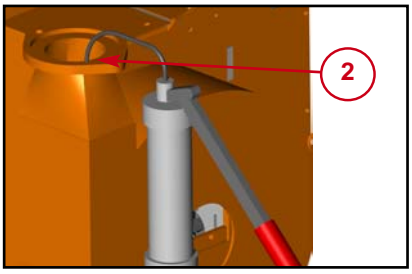

1. Remove the discharge tube.
2. Apply multipurpose grease to surface shown.
3. Refit discharge tube.

ENGINE MANUFACTURER'S HANDBOOK

Refer to your Engine Manufacturer's Handbook for detailed instructions on the following:

- Changing the fuel filter
- Checking the engine oil
- Changing the engine oil
- Changing the engine oil filter

ENVIRONMENTAL MANUFACTURING LLP 12 MONTH SHREDDER WARRANTY

WARRANTY PERIOD

The warranty period for the shredder commences on the date of sale to the first end user and continues for a period of 12 months. This guarantee is to the first end user only and is not transferable except when an authorised Timberwolf Dealer has a shredder registered with Environmental Manufacturing LLP as a hire shredder or long term demonstrator – in these situations they are duly authorised to transfer any remaining warranty period to their first end user. Any warranty offered by the Timberwolf Dealer beyond the original 12 month period will be wholly covered by said Dealer.

LIABILITY

Our obligation under this warranty is limited to repair at Environmental Manufacturing LLP premises or at our option an Environmental Manufacturing LLP approved Timberwolf dealer. No liability will be accepted for special, indirect, incidental, or consequential loss or damages of any kind.

WARRANTY STATEMENT

Environmental Manufacturing LLP warrants to the first end user that;
-Your shredder shall be designed, built and equipped, at the point of sale, to meet all current applicable regulations.
-Your shredder shall be free from manufacturing defects both in materials and workmanship in normal service for the period mentioned above.

Warranty will not apply to a failure where normal use has exhausted the life of a component.

Engine units are covered independently by their respective manufacturer warranties.

OWNERS WARRANTY RESPONSIBILITIES

As the owner of an Environmental Manufacturing LLP shredder you are responsible for the following;
-Operation of the shredder in accordance with the Environmental Manufacturing LLP instruction manual.
-Performance of the required maintenance listed in your Environmental Manufacturing LLP instruction manual.
-In the event of a failure the Environmental Manufacturing LLP authorised Timberwolf dealer is to be notified within 10 days of failure and the equipment is to be made available for unmolested inspection by the dealer technician.

WARRANTY RESTRICTIONS

The Environmental Manufacturing LLP warranty is restricted to the first end user only and is not transferable except when an authorised Timberwolf Dealer has a shredder registered with Environmental Manufacturing LLP as a hire shredder or long term demonstrator – in these situations they are duly authorised to transfer any remaining warranty period to their first end user.

The Environmental Manufacturing LLP warranty may be invalidated if any of the following apply;
-The failed parts or assembly is interfered with in any way.
-Normal maintenance has not been performed.
-Incorrect reassembly of components.
-The machine has undergone modifications not approved in writing by Environmental Manufacturing LLP.
-In the case of tractor driven equipment, use has been on an unapproved tractor.
-Conditions of use can be deemed abnormal.
-The machine has been used to perform tasks contrary to those stated in the Environmental Manufacturing LLP instruction manual.

WARRANTY SERVICE

To obtain warranty service please contact your nearest Environmental Manufacturing LLP approved Timberwolf dealer. To obtain details of the nearest facility please contact Environmental Manufacturing LLP at the address on the front of this manual.
These warranty terms are in addition to and not in substitution for and do not affect any right and remedies which an owner might have under statute or at common law against the seller of the goods under the contract by which the owner acquired the goods.

Environmental Manufacturing LLP

Entec House,
Tomo Industrial Estate,
Stowmarket,
Suffolk IP14 5AY
Tel: 01449 765800 Fax: 01449 765801

E C Declaration of Conformity

CE

Environmental Manufacturing LLP as the designer and manufacturer, certifies that the machine stipulated below complies with all the relevant provisions of the:

Machinery Directive; 2006/42/EC
(& other relevant directives)

and the National Laws and Regulations adopting these directives.

Designer/Manufacturer	:	Environmental Manufacturing LLP
Description of Machinery	:	Self-powered track mounted machine intended to shred general green waste, contaminated brushwood pallets, door frames, wooden furniture, metal door furniture, plastic bottles & other similar items.
Model	:	TW S426TDH Turbo Shredder
Serial No.		*Serial Manufacture*

BSI Transposed Harmonised Standards applied: (including parts/clauses of):

BS EN 12100-1: 2003 Safety of Machinery- Basic concepts, BS EN 13857-1: 2008 Safety of Machinery-Safety distances to danger zones, BS EN 60204-1: 1998 Safe electrical practices, BS EN 13732-1:2006 Safety of Machinery – Temperatures of touchable surfaces, BS EN 13849-1: 2008 – Safety of Machinery – Safety related parts of control systems, BS EN 982: 1996 – Safety of Machinery – Hydraulics, BS EN 1088: 1995 – Safety of Machinery – Interlocking devices, BS EN 13525: 2005 – Forestry Machinery – Wood chippers – Safety.

"Responsible" Person empowered to sign: _____ **Mr. Jeff Haines**

Position in Company: Technical Director

Date: 1st December 2009

ENVIRONMENTAL
MANUFACTURING LLP
STOWMARKET,
SUFFOLK IP14 5AY UK
MODEL
SERIAL NO.
CARR.
TYP/SN.
GROSS
WEIGHT
NOM.
POWER
DATE
EXAMPLE

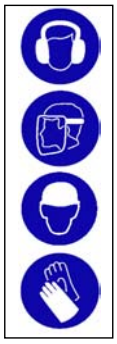

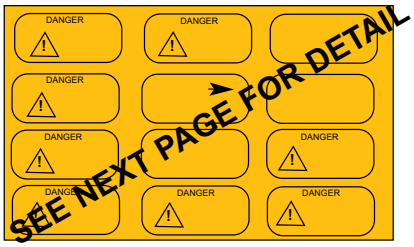

616	617	670	671	1258

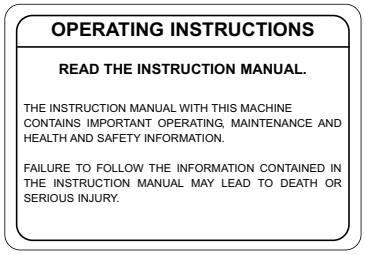

1363	1399	1522	1661	1662

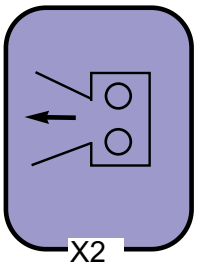

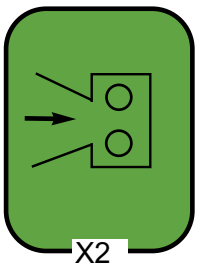

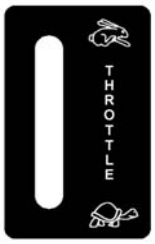

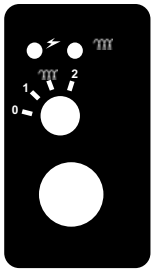

2800	2801	2949	2950	2951

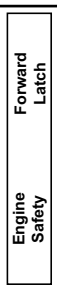

X2

2995	3004	4099	17861	17862

17865	18325	18393	18483	18713	18714

671 - these individual decals are supplied as a set, they may not all apply to your machine.

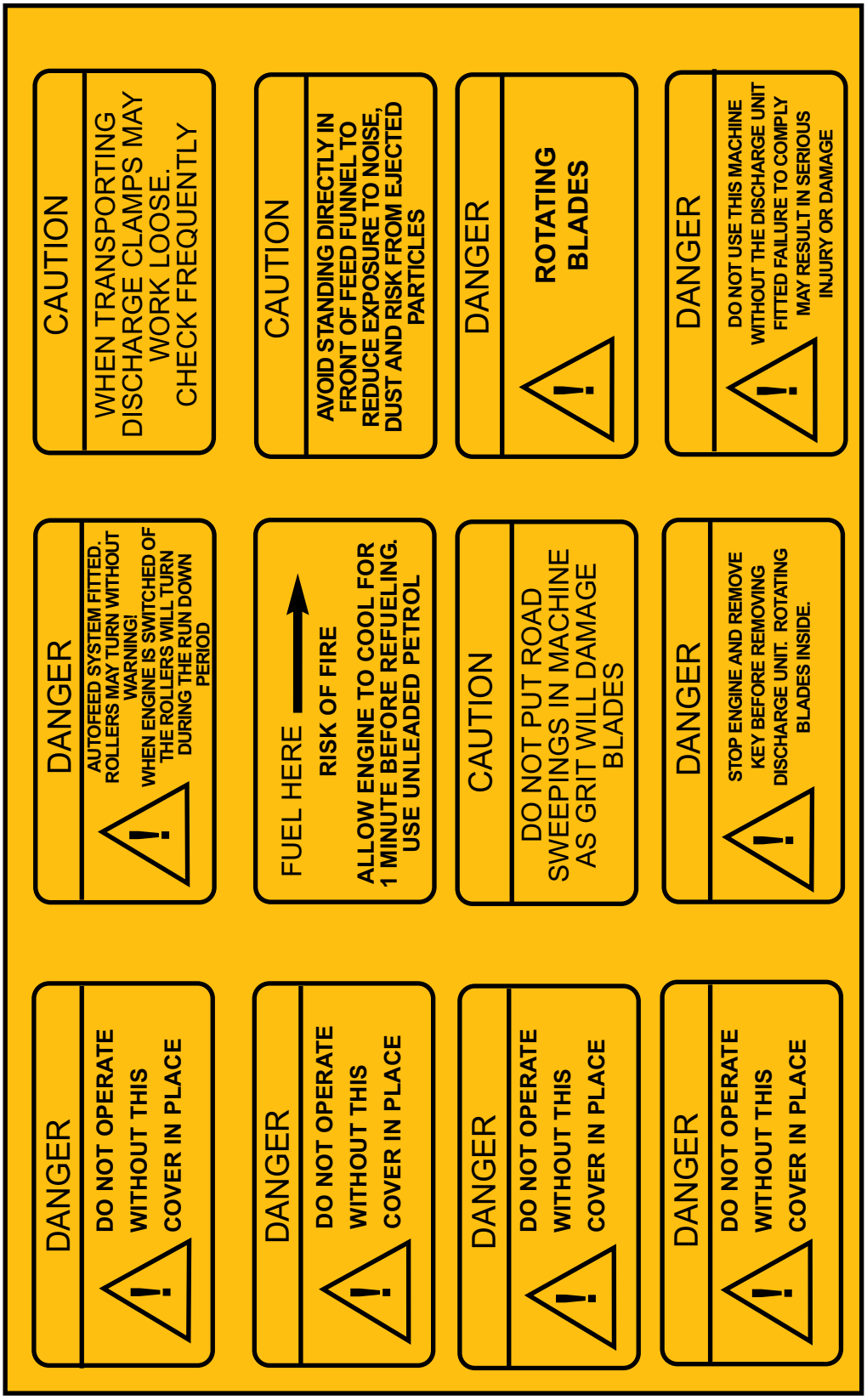

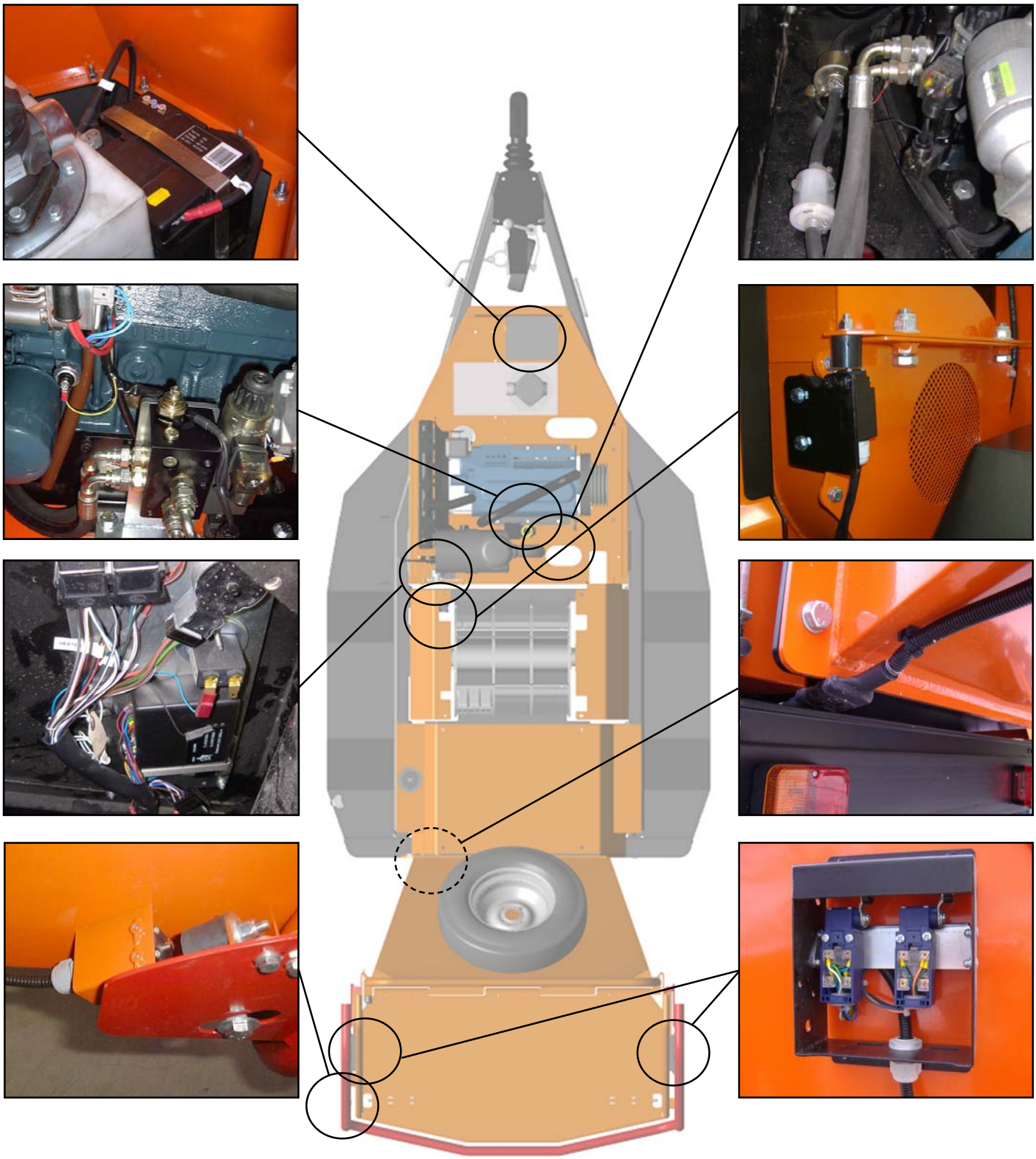

Date Last Modified: 13th Feb 08

KIT NO: 17826

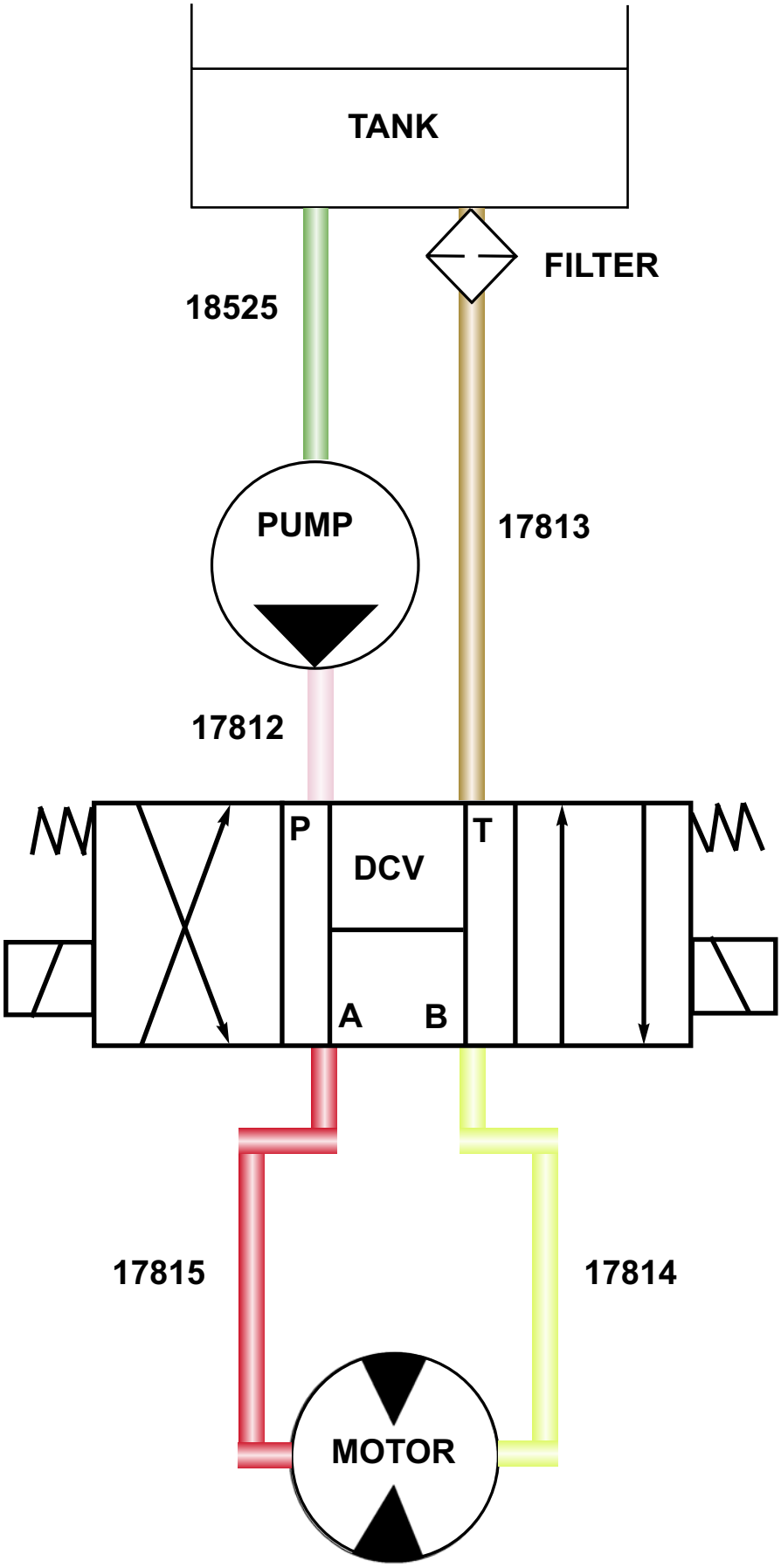

Date Last Modified: 12th Sept 06

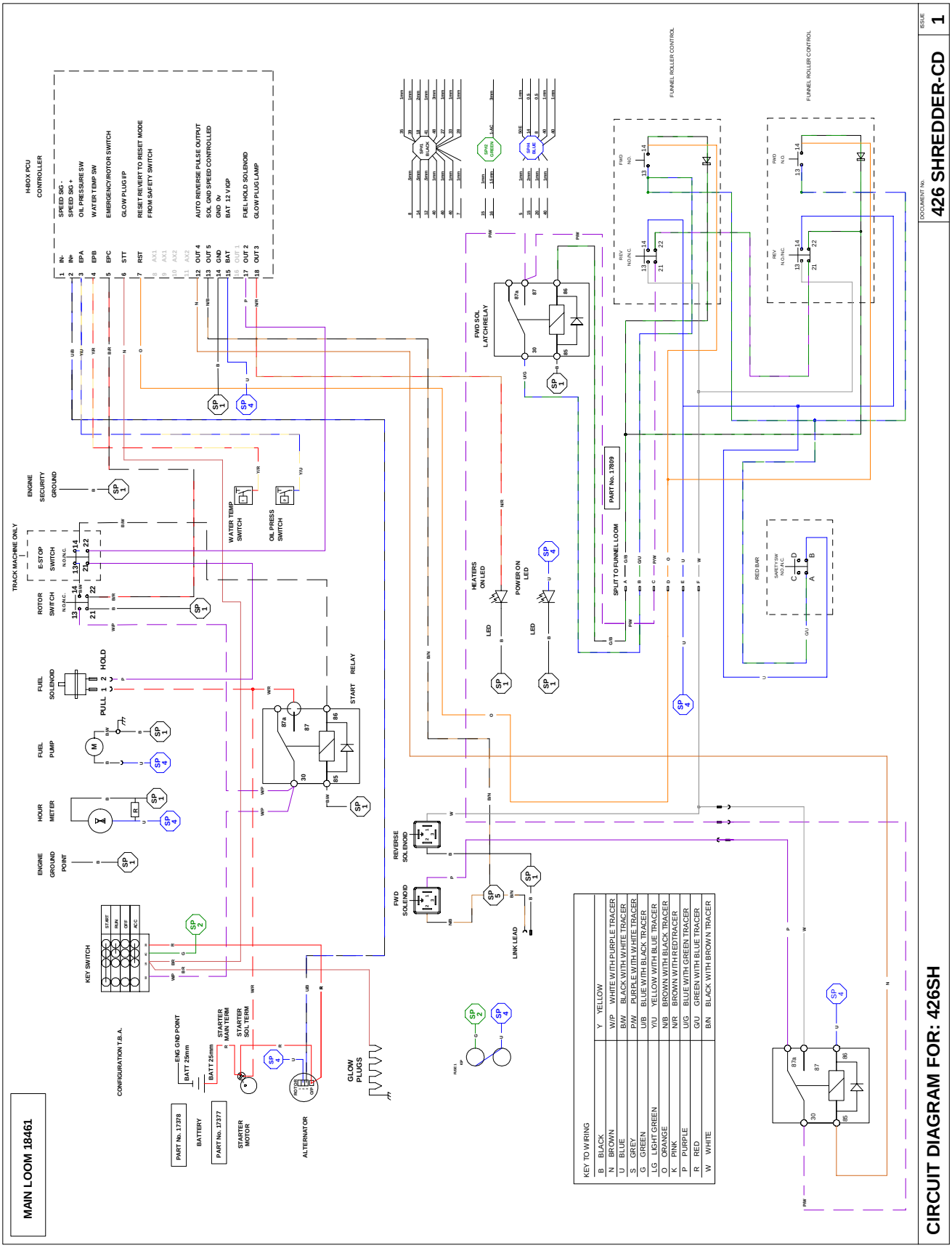

Date Last Modified: 15th Feb 08

TIMBERWOLF S426TDHB

PARTS LISTS

The following illustrations are for parts identification only. The removal or fitting of these parts may cause a hazard and should only be carried out by trained personnel.

	Page No.
CHASSIS	31
CONTROL BOX	32
CONTROL PANEL	33
DECALS	SEE PAGES 25 - 26
DISCHARGE	34
DRIVE TRAIN	35
ELECTRICAL LAYOUT	36
ENGINE	37
ENGINE BAY	38
FUEL TANK/GUARDS	39
FUNNEL	40
HYDRAULICS	41
ROLLER BOX	42
ROTOR DRUM	43
ROTOR HOUSING	44
V- BELT TENSIONING TABLE	45

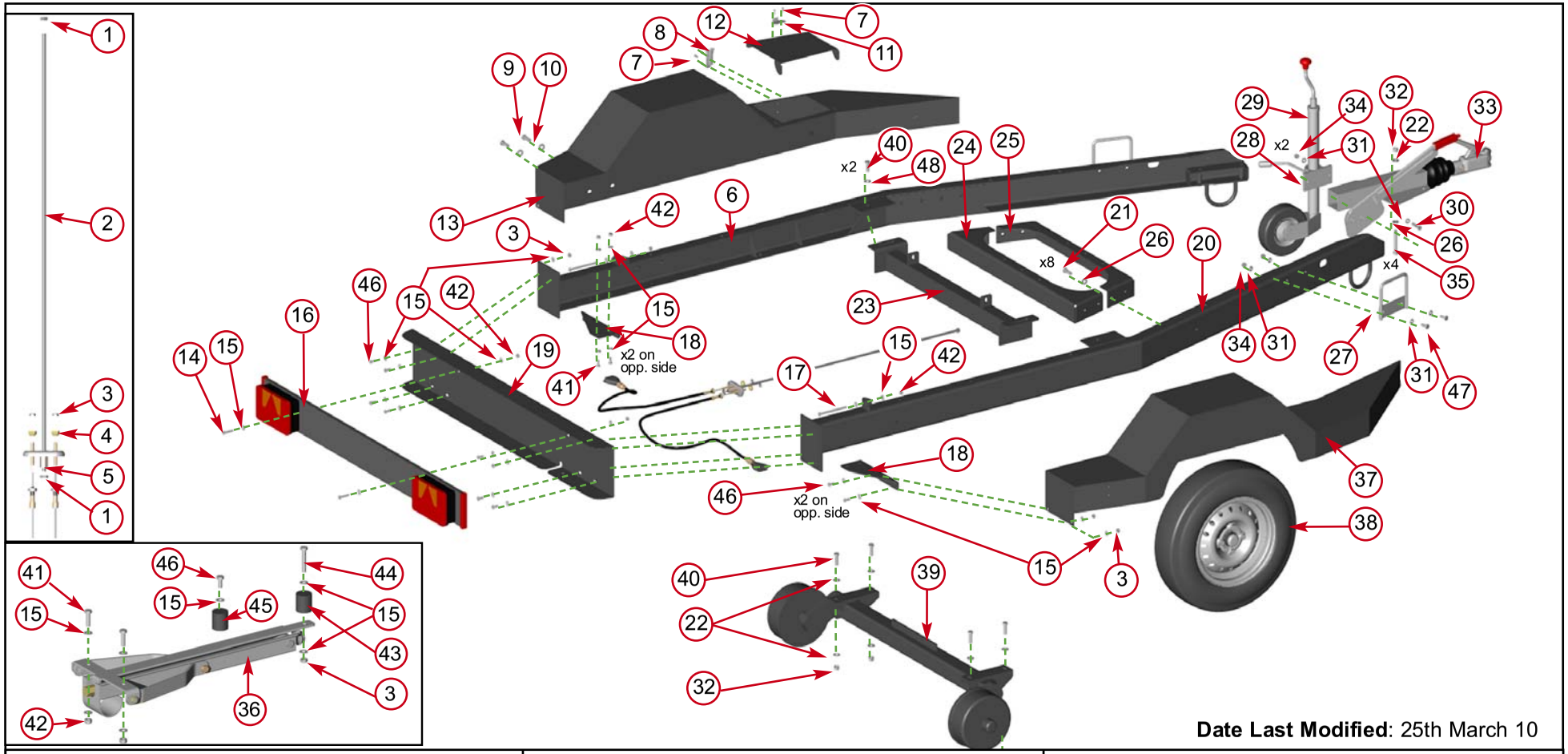

Date Last Modified: 25th March 10

Item	Part No	Part Name	Q'ty
1	1036	M10 Plain Nut	2
2	17981	Brake Rod	1
3	0481	M8 T Nyloc Nut	9
4	0078	Nut Ball	2
5	0079F	Nut Ball	1
6	19058FB	Outer Chassis Beam N/S	1
7	0067	Pop Rivet	4
8	2963	Catch	1
9	0360	M10/25 Bolt	8
10	0839	M10 C Washer	8
11	0358	Catch Plate	1
12	17857FB	Tool Box Lid	1
13	17856FB	Nearside Mudguard	1
14	0352	M8/40 Bolt	2
15	0712	M8 C Washer	16
16	19056	Lightboard	1
17	18121	M8/120 Bolt	2

Item	Part No	Part Name	Q'ty
18	19071FB	Mudguard Support N/S	1
19	19057FB	Lightboard Bracket	1
20	19059FB	Outer Chassis Beam O/S	1
21	0321	M12/30 Bolt	8
22	0704	M12 C Washer	12
23	18352FB	Rotor Housing Cross Beam	1
24	17547FB	Rear Cross Beam	1
25	17548FB	Front Cross Beam	1
26	0702	M12 A Washer	12
27	3043FS	Outer Beam Handle	2
28	17501	Jockey Wheel Clamp	1
29	18333	Jockey Wheel	1
30	1520	M10/45 Bolt	2
31	0701	M10 A Washer	8
32	0644	M12 P Nyloc Nut	8
33	17493	Tow Head	1
34	4345	M10 P Nyloc Nut	6

Item	Part No	Part Name	Q'ty
35	0313	M12/100 Bolt	4
36	2633	Wind Down Jack Stand	1
37	17855FB	Offside Mudguard	1
38	1932	Wheel (inc. spare)	3
39	17792	Axle	1
40	0429	M12/35 Bolt	6
41	0350	M8/25 Bolt	4
42	0479	M8 P Nyloc Nut	2
43	1683	Plain Stand Off	1
44	0354	M8/60 Bolt	1
45	1682	Threaded Stand Off	1
46	0346	M8/20 Bolt	5
47	0382	M10/30 Bolt	4
48	0415	Heavy Washer	2
49	19072FB	Mudguard Support O/S	1

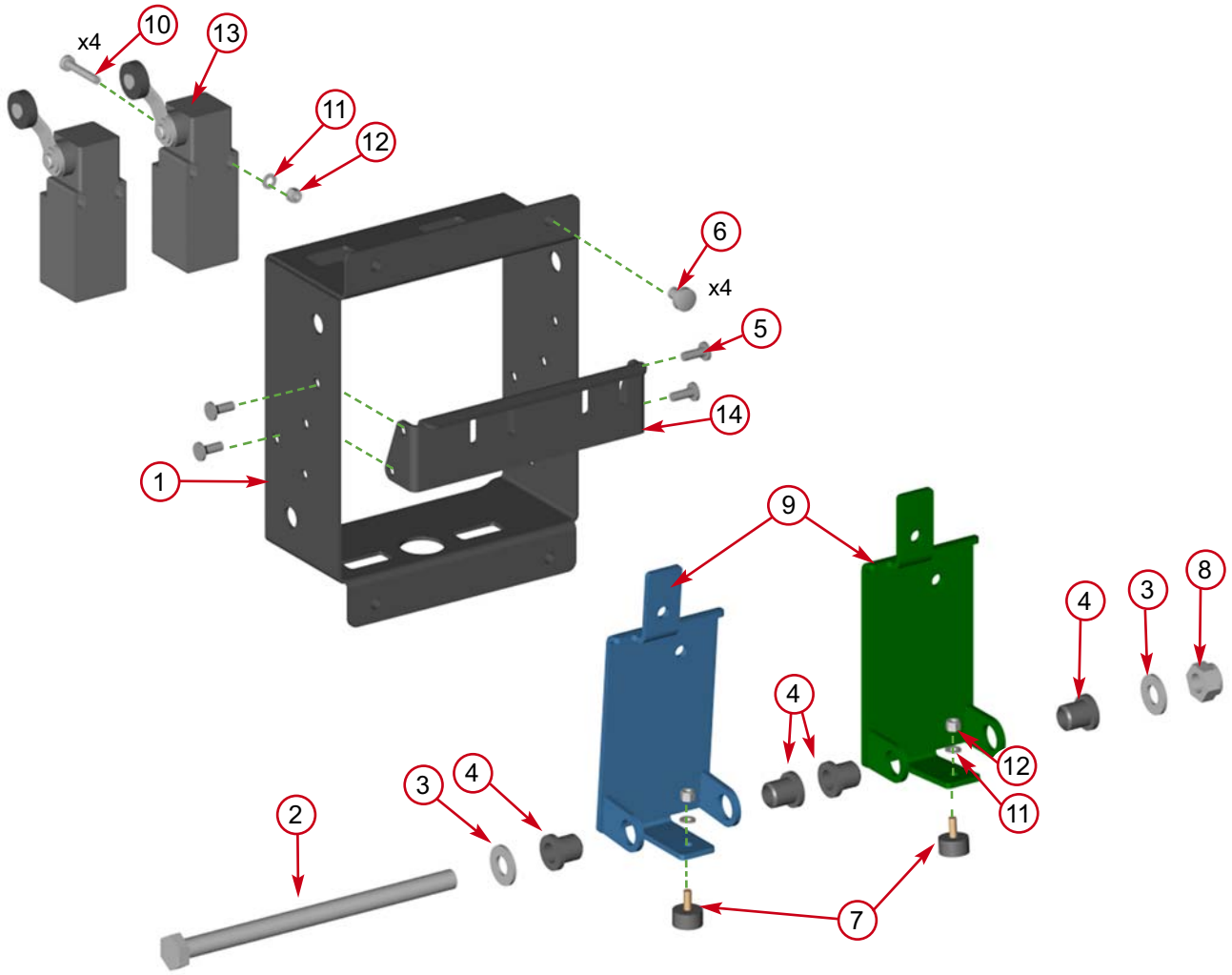

Date Last Modified: 3rd Jan 08

Item	Part No	Part Name	Q'ty
1	17802FB	Control Box Cover	1
2	17963	M10/160 Bolt	1
3	0839	M10 C Washer	2
4	2804	Bush M10 Top Hat	4
5	0067	Pop Rivet M5/12	4
6	18313	M6/16 Button Head	4
7	2834	AV Mount VE Type	2

Item	Part No	Part Name	Q'ty
8	4345	M10 P Nyloc Nut	1
9	17803FS	Finger Plate	2
10	18168	M4/35 Pan Pozi	4
11	18100	M4 Washer	4
12	18235	M4 P Nyloc Nut	4
13	17927	Limit Switch	2
14	17805FS	Switch Mounting Plate	1

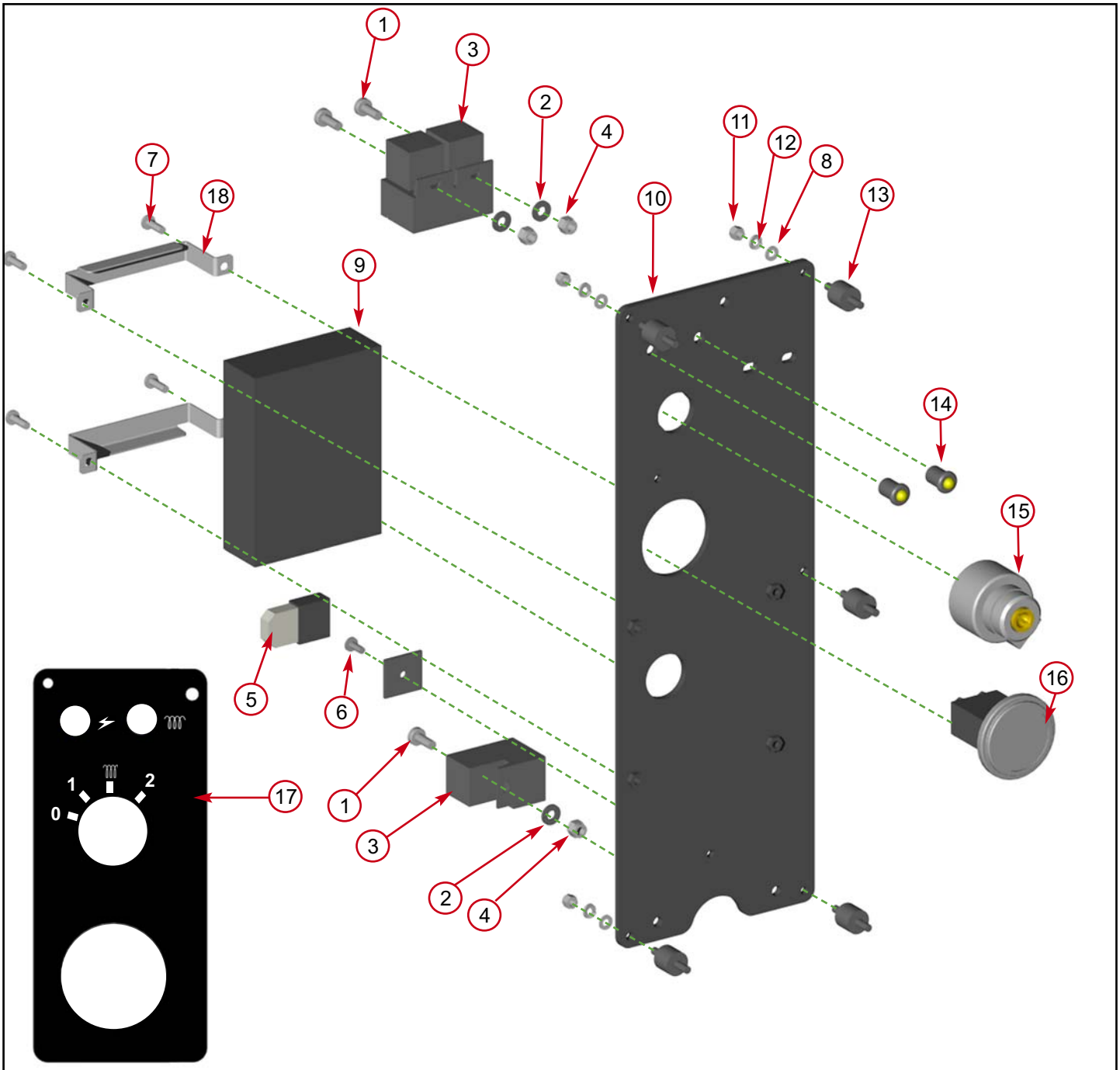

Date Last Modified: 13th Feb 08

Item	Part No	Part Name	Q'ty
1	0438	M6/16 Pan Pozi	3
2	0709	M6 C Washer	3
3	Supp'd with loom	Relay	3
4	0391	M6 T Nyloc Nut	3
5	Supp'd with loom	Fuse	1
6	1151	Countersunk Pop Rivet	1
7	18104	M5/12 Pan Pozi	4
8	0857	M5 A Washer	5
9	18405	H-Box	1

Item	Part No	Part Name	Q'ty
10	2958FS	Electrical Panel	1
11	18291	M5 Plain Nut	5
12	3024	M5 Spring Washer	5
13	4033	M5 AV Mount	5
14	Supp'd with loom	LED	2
15	Supp'd with engine	Ignition Switch	1
16	0327	Hours Counter	1
17	2951	Control Panel Decal	1
18	18398F	H-Box Bracket	2

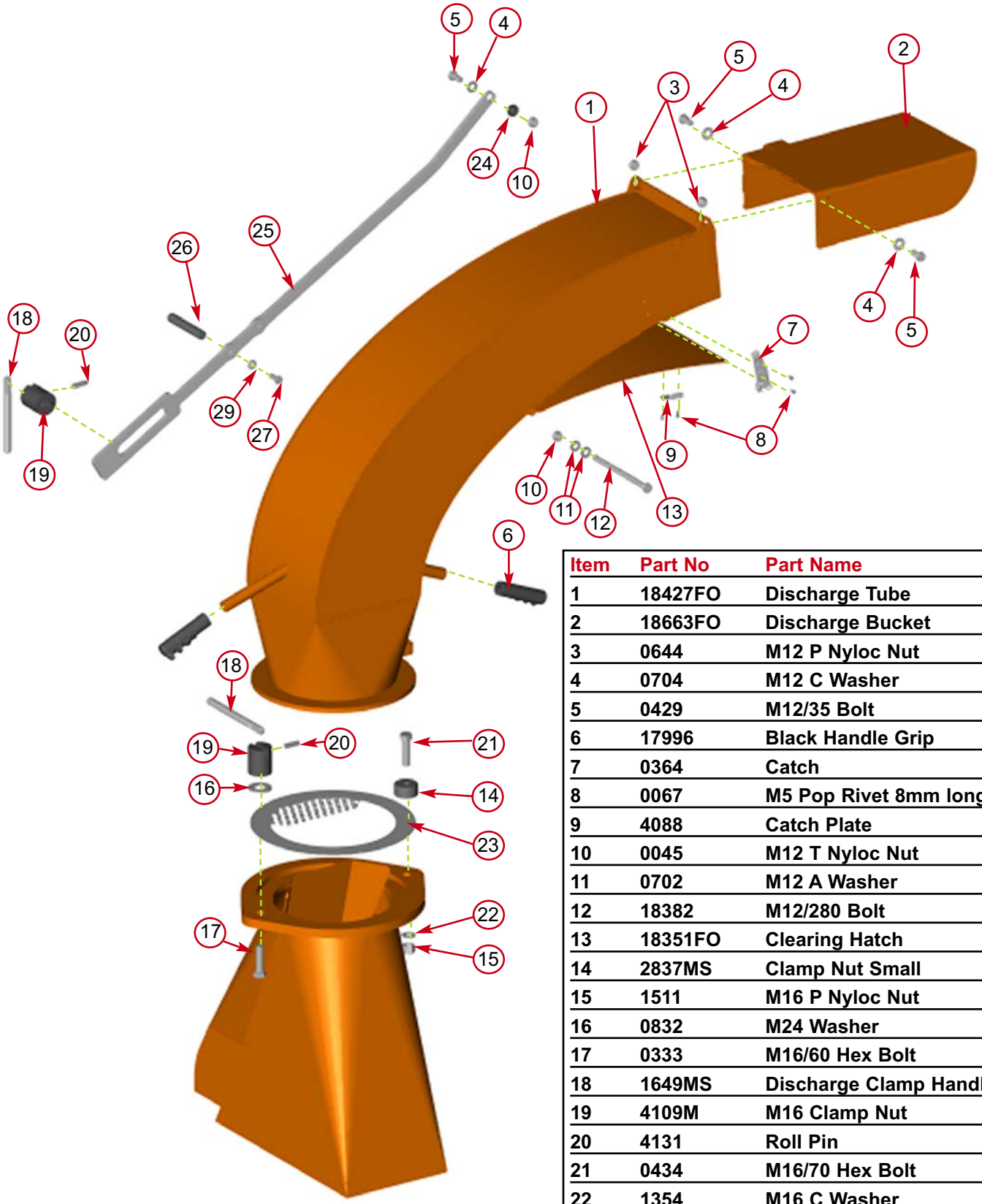

Item	Part No	Part Name	Q'ty
1	18427FO	Discharge Tube	1
2	18663FO	Discharge Bucket	1
3	0644	M12 P Nyloc Nut	2
4	0704	M12 C Washer	2
5	0429	M12/35 Bolt	3
6	17996	Black Handle Grip	2
7	0364	Catch	2
8	0067	M5 Pop Rivet 8mm long	8
9	4088	Catch Plate	2
10	0045	M12 T Nyloc Nut	1
11	0702	M12 A Washer	2
12	18382	M12/280 Bolt	1
13	18351FO	Clearing Hatch	1
14	2837MS	Clamp Nut Small	1
15	1511	M16 P Nyloc Nut	1
16	0832	M24 Washer	1
17	0333	M16/60 Hex Bolt	1
18	1649MS	Discharge Clamp Handle	2
19	4109M	M16 Clamp Nut	2
20	4131	Roll Pin	2
21	0434	M16/70 Hex Bolt	1
22	1354	M16 C Washer	1
23	18643	Discharge Grill Washer	1
24	18671	Bush Top Hat	1
25	18664FS	Stay	1
26	18710	Handle	1
27	0360	M10/25 Bolt	1
28	0701	M10 A Washer	1
29	0839	M10 C Washer	1

Date Last Modified: 16th July 09

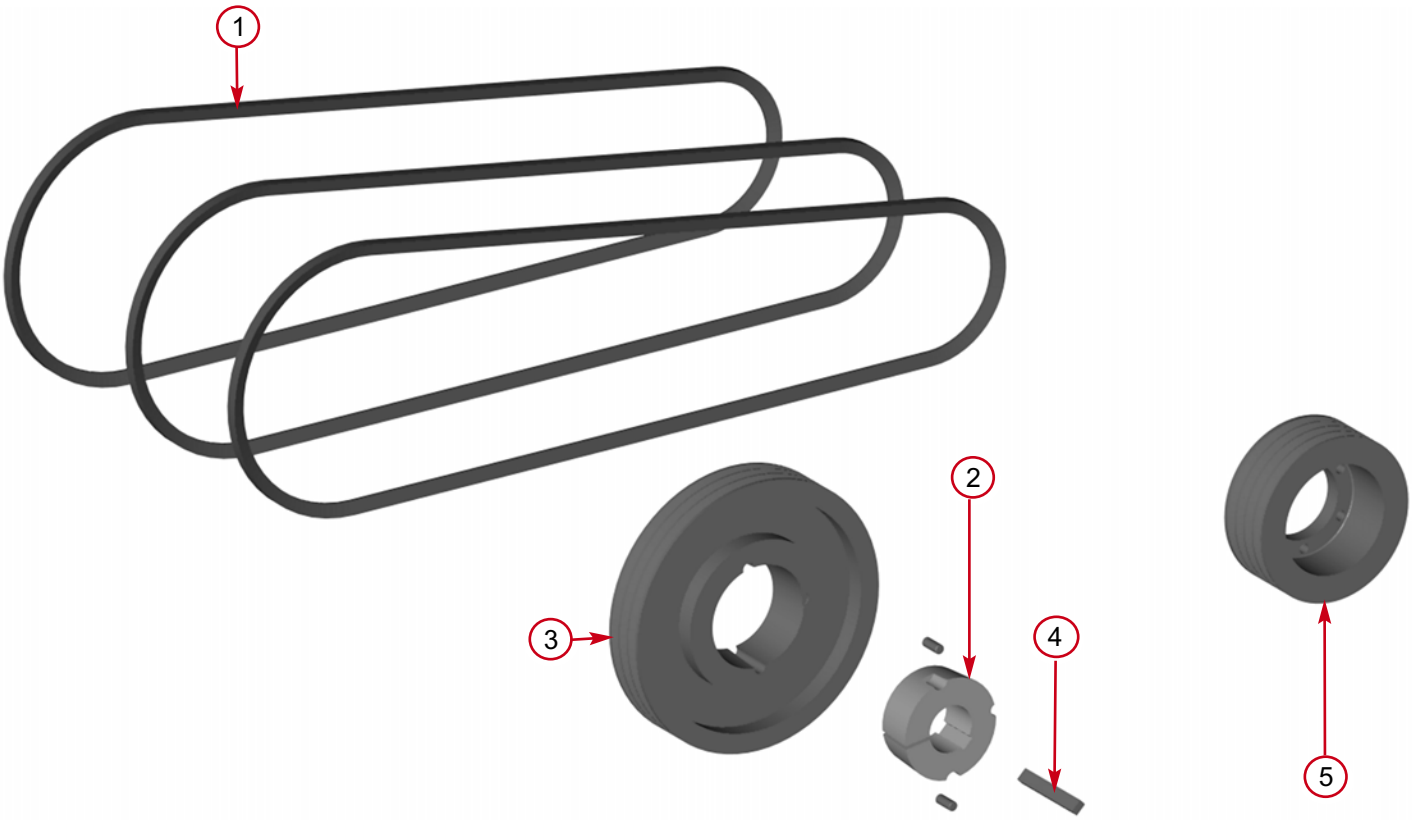

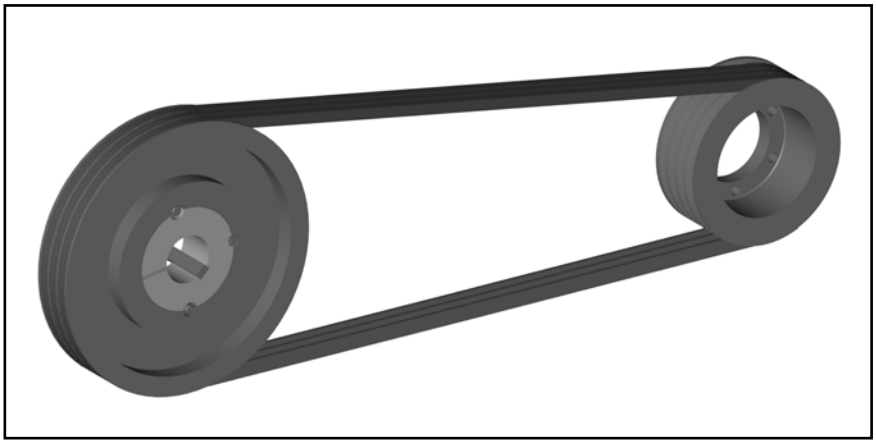

Item	Part No	Part Name	Q'ty
1	18068	Vee Belt 2120 SPB	3
2	17921	Taper Lock Bush 3020 50 mm	1
3	18067	Pulley 280 x 3	1
4	18328	Key 37 x 14 x 9	1
5	18029	Pulley Engine 168 x 3 SPB	1

Date Last Modified: 15th Aug 07

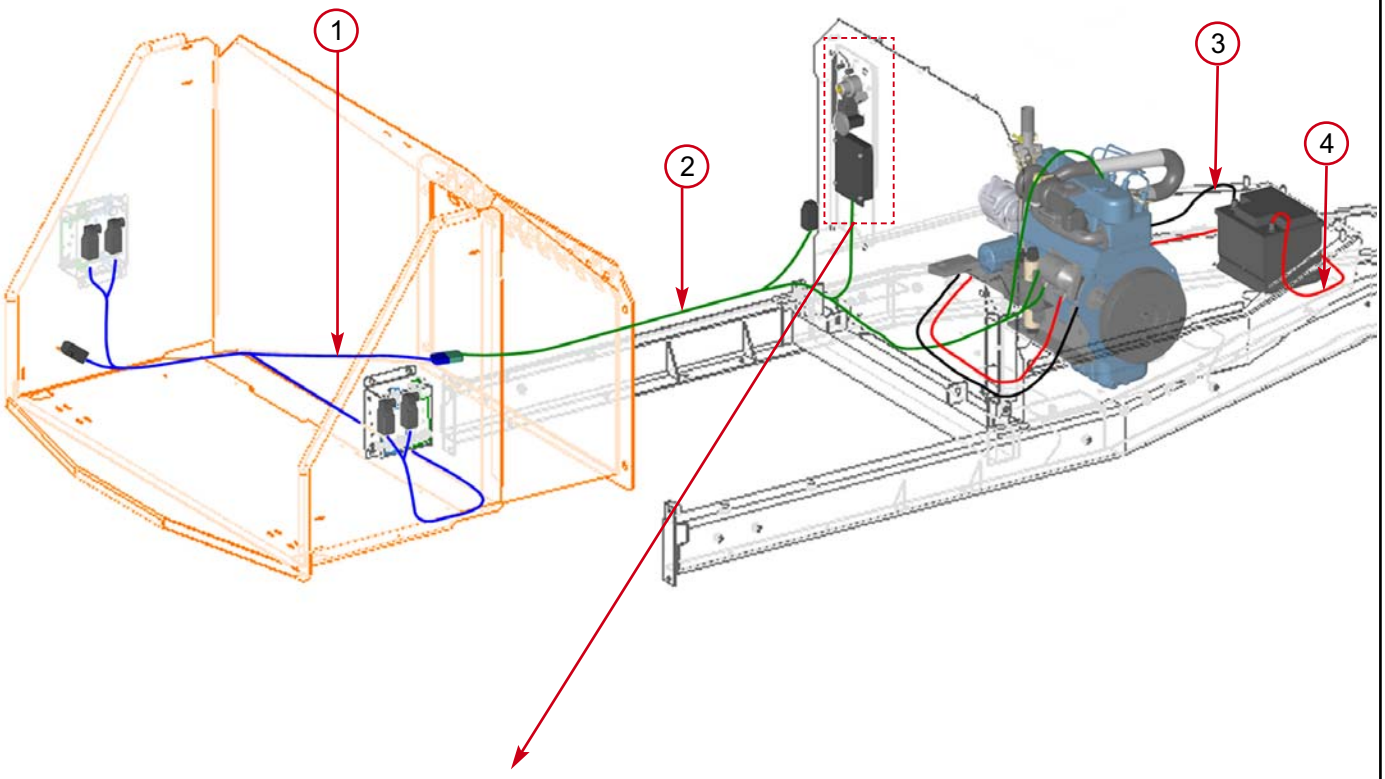

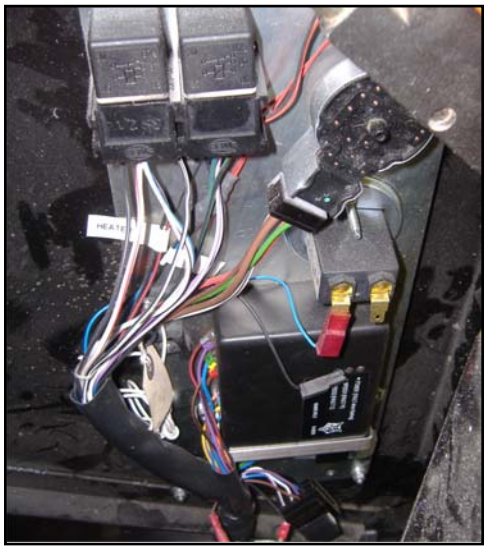

Date Last Modified: 13th Feb 08

Item	Part No	Part Name	Q'ty
1	17809	Control Box/Safety Switch Loom	1
2	18461	Main Loom	1
3	17378	Negative Battery Cable	1
4	17377	Positive Battery Cable	1

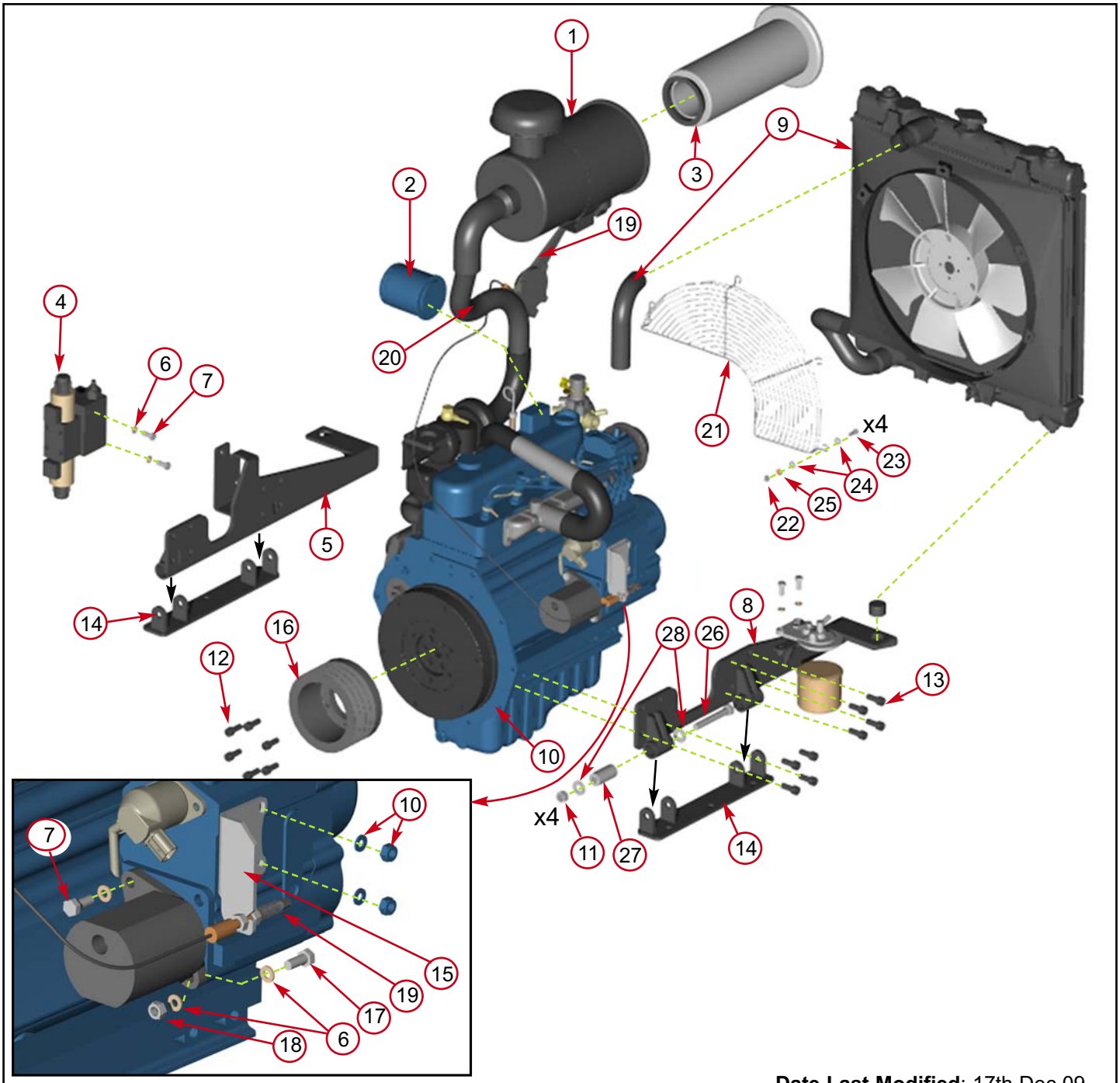

Date Last Modified: 17th Dec 09

Item	Part No	Part Name	Q'ty
1	4316	Air Cleaner	1
2	0095	Oil Filter	1
3	—	Air Filter	1
4	4252	Directional Control Valve (DCV)	1
5	19156FB	Engine Bracket Nearside	1
6	0711	M8 A Washer	5
7	0346	M8/20 Bolt	3
8	19155FB	Engine Bracket Offside	1
9	4319	Radiator Kit	1
10	4313	Engine	1
11	0644	M12 P Nyloc Nut	4
12	4054	M10/35 Fine Thread Socket Cap	6
13	0304	M10/25 Fine Thread Socket Cap	16
14	18338FS	Engine Bracket Base	2

Item	Part No	Part Name	Q'ty
15	2954	Throttle Cable Bracket	1
16	18029	Pulley Engine 168 x 3 SPB	1
17	0352	M8/40 Bolt	1
18	0481	M8 T Nyloc Nut	1
19	2946	Throttle Assembly	1
20	17794FB	Air Intake Tube	1
21	4335	Radiator Fan Guard	1
22	0392	M6 Plain Nut	4
23	0437	M6/16 Bolt	4
24	0709	M6 C Washer	8
25	18106	M6 Spring Washer	4
26	0332	M12/90 Bolt	4
27	18332	AV Mount	4
28	0704	M12 C Washer	8

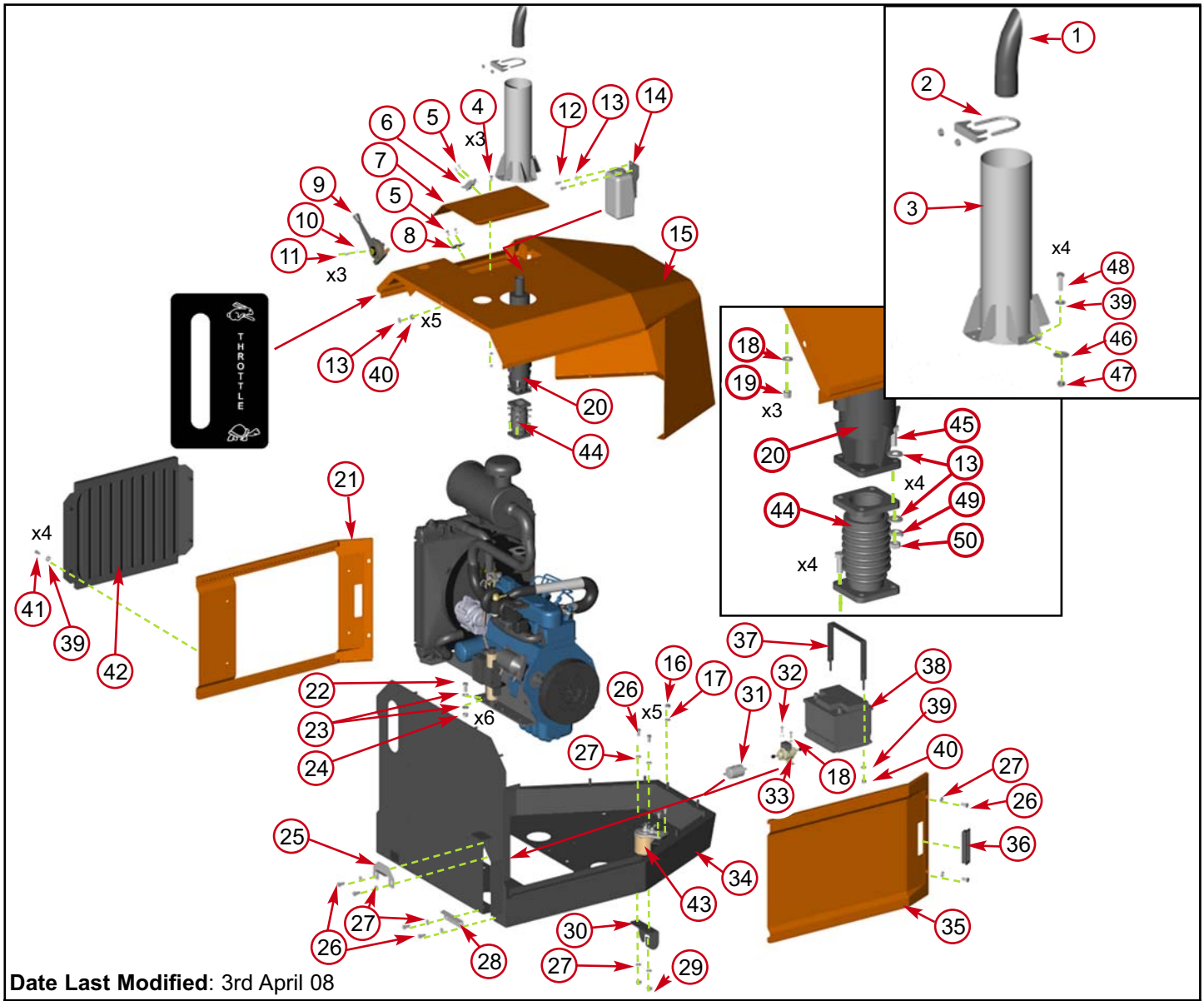

Date Last Modified: 3rd April 08

Item	Part No	Part Name	Q'ty
1	18477FB	Exhaust Deflector	1
2	18478	Exhaust Clamp	1
3	18423	Exhaust Tube	1
4	0438	M6/16 Pan Pozi	3
5	0067	Pop Rivet 4.8 x 12	4
6	0235	Catch	1
7	17544FO	Access Panel	1
8	4088	Catch Plate	1
9	2946	Throttle Assembly	1
10	0435	M5/16 Pan Posi	3
11	0857	M5 A Washers	3
12	0344	M8/16 Bolt	2
13	0711	M8 A Washer	7
14	4320	Reserve Tank	1
15	18334FO	Top Engine Guard	1
16	4345	M10 P Nyloc Nut	5
17	0701	M10 A Washer	5
18	0709	M6 C Washer	5
19	0142	M6 P Nyloc Nut	3
20	18476	Exhaust & Fittings	1
21	17539	Side Guard with Filter	1
22	0431	M12/40 Bolt	6
23	0704	M12 C Washer	12
24	0644	M12 P Nyloc Nut	6
25	17738FS	Top Belt Guide	1

Item	Part No	Part Name	Q'ty
26	0878	M10/20 Bolt	8
27	0839	M10 C Washer	12
28	17737FS	Bottom Belt Guide	1
29	0052	M10 T Nyloc Nut	2
30	17820FS	Light Board Cable Bracket	1
31	4315	In-Line Fuel Filter	1
32	0437	M6/16 Bolt	2
33	4314	Fuel Pump	1
34	18326FB	Base Guard	1
35	17538FO	Side Guard	1
36	17991	Side Panel Handle	2
37	17776FS	Battery Strap	1
38	4210	Battery	1
39	0712	M8 C Washer	10
40	0479	M8 P Nyloc Nut	7
41	1009	M8/25 Button Head	4
42	18012FB	Mesh for Side Guard	1
43	0085	Fuel Filter	1
44	18456	Flexi Adaptor	1
45	0351	M8/30 Bolt	4
46	0714	M8 Penny Washer	4
47	0481	M8 T Nyloc Nut	4
48	0346	M8/20 Bolt	4
49	1008	M8 Spring Washer	4
50	0476	M8 Plain Nut	4

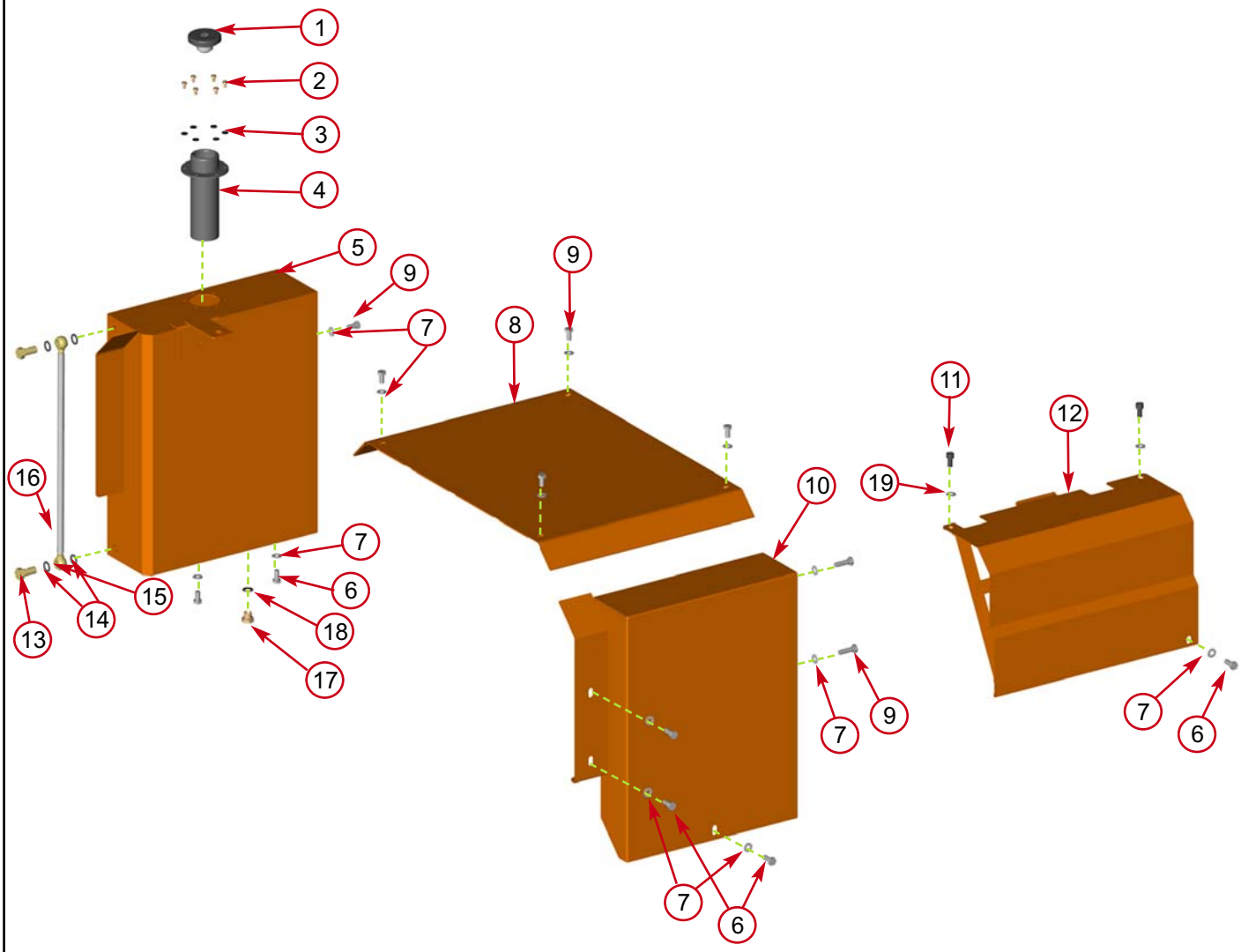

Date Last Modified: 25th March 10

Item	Part No	Part Name	Q'ty
1	1374	Locking Tank Cap	1
2	1658	M6/12 Bolt	6
3	0709	M6 C Washer	6
4	2617FS	Fuel Tank Filler Assy	1
5	17537FO	Fuel Tank	1
6	0878	M10/20 Bolt	6
7	0839	M10 C Washer	12
8	18310FO	Roller Box Lid	1
9	0360	M10/25 Bolt	11
10	18309FO	Offside Roller Box Guard	1

Item	Part No	Part Name	Q'ty
11	1629	M10/25 Caphead	4
12	18311FO	Offside Rotor Housing Guard	1
13	4059	Banjo Bolt	2
14	2896	Copper Washer	4
15	17998	Banjo Fitting	2
16	17933	Clear Tubing	1
17	0211	3/8" Drain Plug	1
18	0396	3/8" Dowty Washer	1
19	0701	M10 A Washer	12

Date Last Modified: 25th March 10

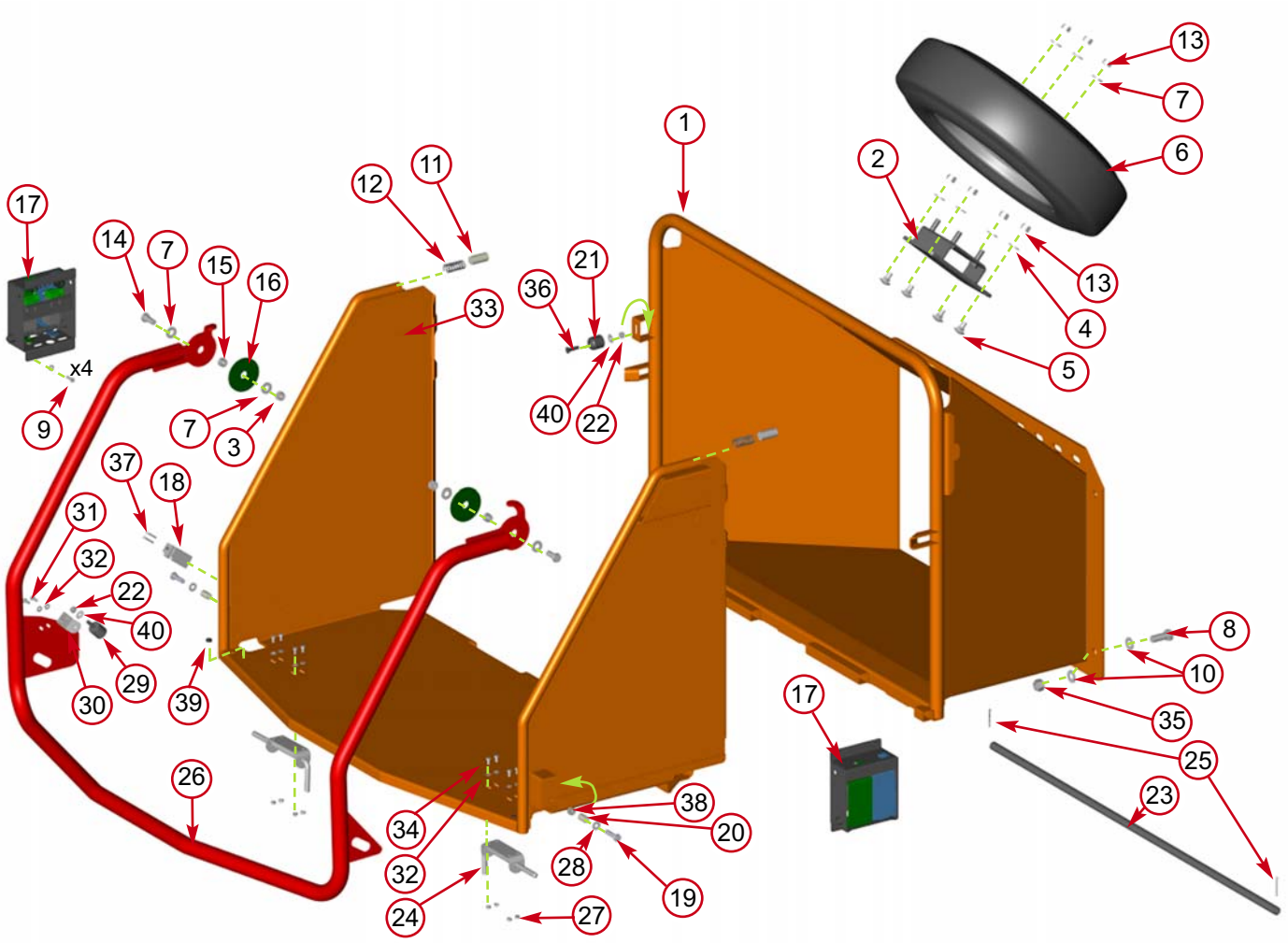

Item	Part No	Part Name	Q'ty
1	18321FO	Funnel	1
2	1933FS	Spare Wheel Bracket	1
3	0045	M12 T Nyloc Nut	2
4	0702	M12 A Washer	4
5	19282	M12/30 Cup Square	4
6	1932	Spare Wheel	1
7	0704	M12 C Washer	7
8	18381	M16/45 Bolt	4
9	0438	M6/16 Pan Pozi	8
10	1143	M16 A Washer	8
11	1601	Nylon Piston	2
12	1603	Die Spring	2
13	0644	M12 P Nyloc Nut	7
14	0429	M12/35 Bolt	2
15	1605M	Stainless Spacer	2
16	1599	Bearing Washer	2
17	*(see page 32)*	Control Box	2
18	1348	Limit Switch	1
19	1520	M10/45 Bolt	2
20	1591	Nylon Spacer	2

Item	Part No	Part Name	Q'ty
21	4206	Nylon Bush	1
22	0479	M8 P Nyloc Nut	2
23	2923FS	Hinge Pin	2
24	2986	1/2" Spring Bolt	2
25	1276	Split Pin	2
26	1598FR	Safety Bar	1
27	0391	M6 T Nyloc Nut	8
28	4344	M10 C Repair Washer	2
29	0178	Rubber End Stop	1
30	2727FS	Actuator Bracket	1
31	0437	M6/16 Bolt	2
32	0709	M6 C Washer	10
33	2914FO	Feed Tray	1
34	0437	M6/16 Bolt	8
35	1511	M16 P Nyloc Nut	4
36	18115	M8/50 Csk Soc.	1
37	1006	M4/30 Pan Pozi	2
38	4345	M10 P Nyloc Nut	1
39	2493	Rubber Cap	2
40	0712	M8 C Washer	2

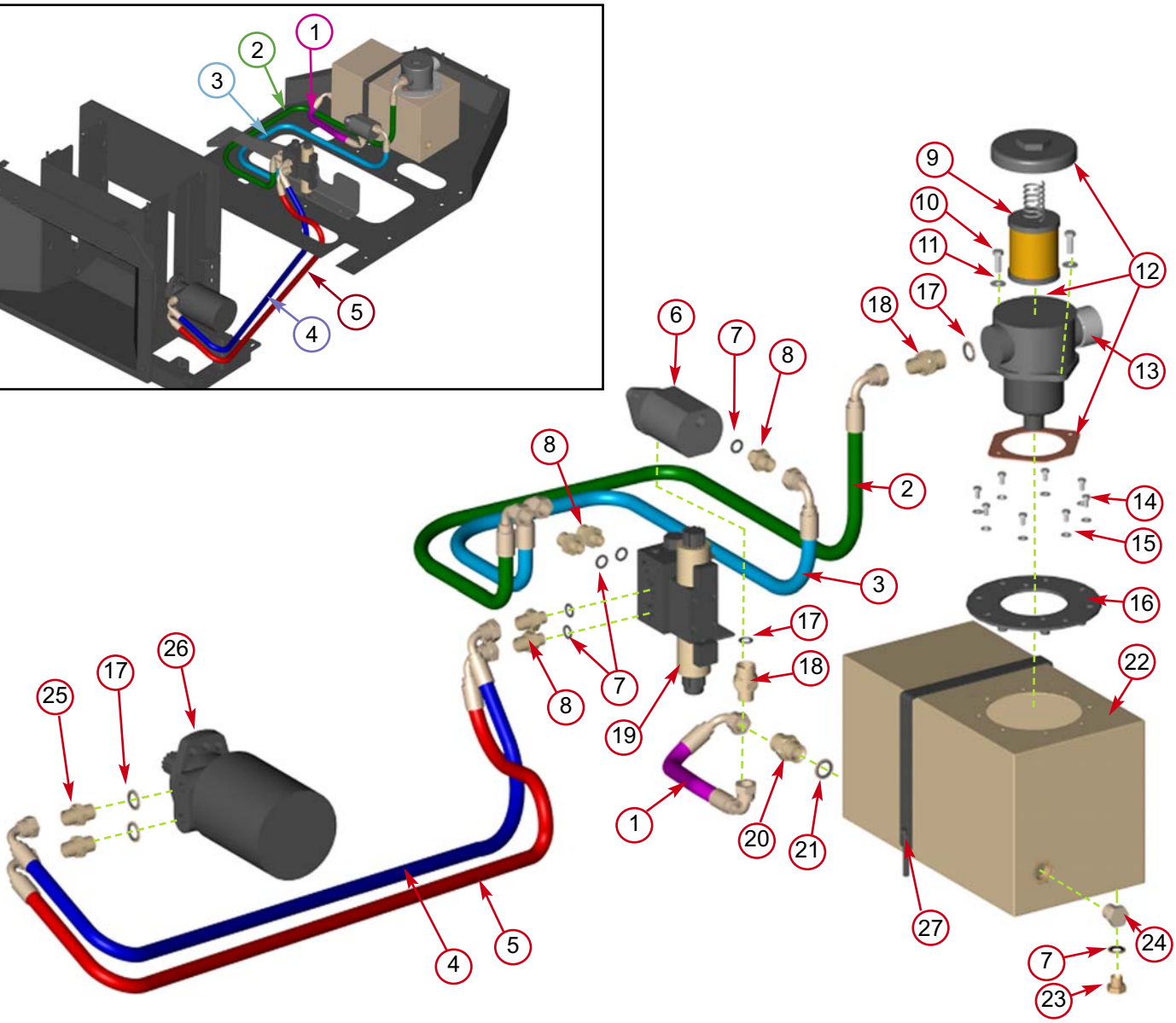

Date Last Modified: 13th Feb 08

Item	Part No	Part Name	Q'ty
1	18525	Hose 3/4"	1
2	17813	Hose 1/2"	1
3	17812	Hose 1/2"	1
4	17815	Hose 1/2"	1
5	17814	Hose 1/2"	1
6	1660	Hydraulic Pump	1
7	0396	3/8 Dowty Seal	6
8	0026	Adaptor mm 1/2"- 3/8" BSP	5
9	0100	Filter	1
10	0350	M8/25 Bolt	2
11	0711	M8 A Washer	2
12	1434	Tank Top Filter Housing	1
13	1067	Breather Filter	1
14	1658	M6/12 Bolt	8

Item	Part No	Part Name	Q'ty
15	0709	M6 C Washer	8
16	1702FS	Tank Top Plate	1
17	0398	1/2 Dowty Seal	4
18	1583	Adaptor 1/2"- 3/4" BSP	1
19	4252	Directional Control Valve	1
20	1766	Adapter 3/4" - 3/4" BSP	1
21	0152	3/4 Dowty Seal	1
22	1703	Tank	1
23	0211	3/8" BSP Plug	1
24	4219	3/4" Tapered Blanking Plug	1
25	0027	Adaptor 1/2"- 1/2" BSP	2
26	17810	Motor	1
27	17777FS	Hydraulic Tank Strap	1

ROLLER BOX

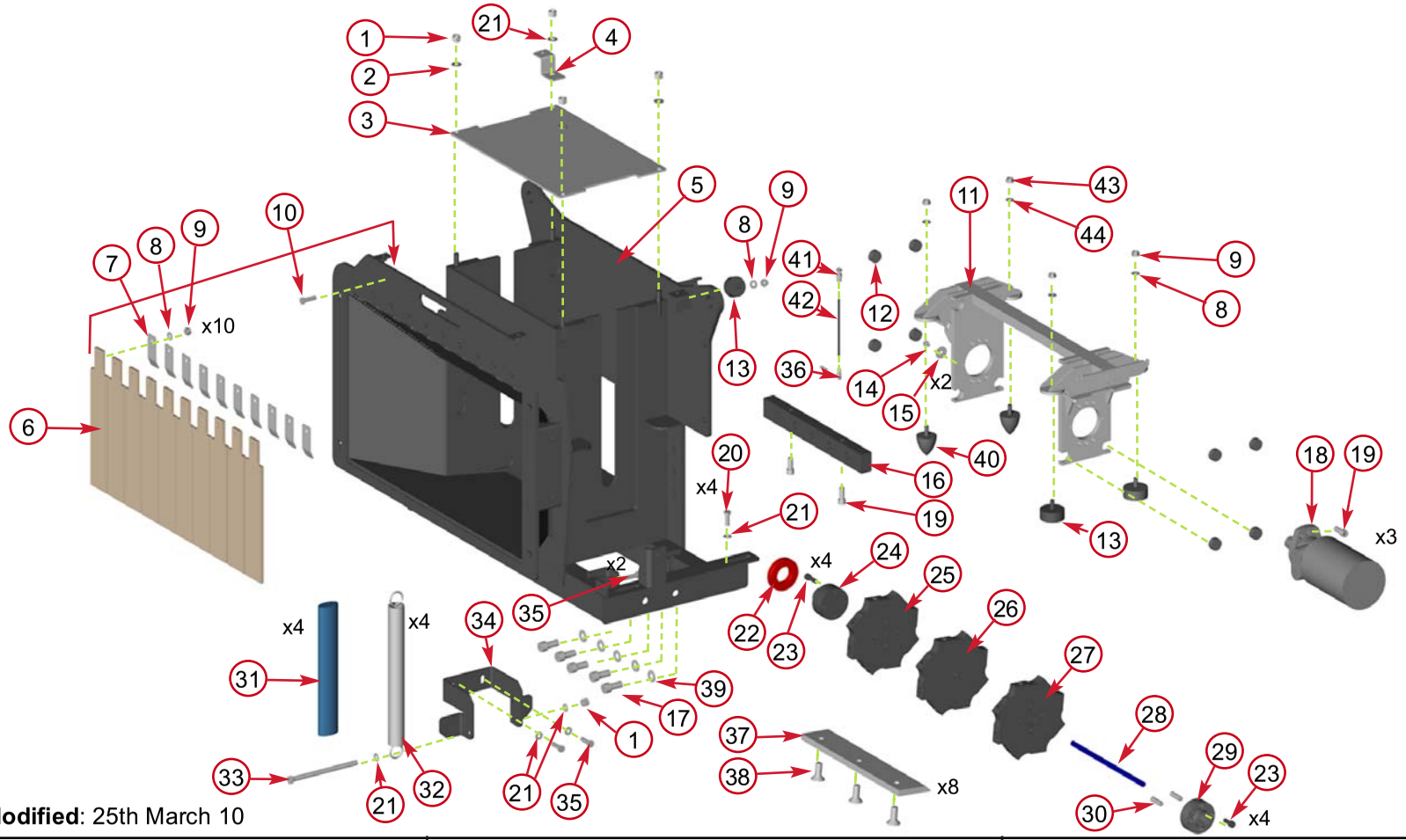

Date Last Modified: 25th March 10

Item	Part No	Part Name	Q'ty
1	0644	M12 P Nyloc Nut	5
2	0702	M12 A Washer	4
3	17556S	Top Plate	1
4	17775FS	Top Guard Bracket	1
5	18317FB	Roller Box	1
6	17609	Flap	10
7	17608FS	Flap Holder	10
8	0701	M10 A Washer	13
9	4345	M10 P Nyloc Nut	13
10	1812	M10/35 Bolt	10
11	17557	Top Roller Slide	1
12	3009	Slide Plug	8
13	17808	AV Mount	3
14	1721	M8/10 Bolt	2
15	0714	M8 Penny Washer	2

Item	Part No	Part Name	Q'ty
16	17553	Anvil	1
17	18181	M16/35 Caphead	5
18	17810	Motor	1
19	1985	M12/30 Caphead	8
20	0321	M12/30 Bolt	4
21	0704	M12 C Washer	9
22	17662M	Roller Spline	1
23	0386	M10/30 Caphead	8
24	18628M	Non-Motor Drive Boss	1
25	17615	Spline Drive End Plate	1
26	17571	Centre Plate Roller	1
27	17570	Spline Drive End Plate	1
28	18379	315mm Tube	1
29	18016M	14T Spline Drive	1
30	18017	12mm x 40mm Dowels	2

Item	Part No	Part Name	Q'ty
31	0839	Layflat Spring Protector	4
32	2116	Spring	4
33	4333	M12/170 Bolt	1
34	17774FS	Spring Hanger Bracket	1
35	0429	M12/35 Bolt	4
36	18474	Rotating Fitting	1
37	17568	Roller Blades	8
38	18059	M16/35 Csk Screw	24
39	18285	M16 Nordlock Washer	5
40	18475	Buffer Cone	2
41	18192	Remote Greaser	1
42	—	150mm x 5mm Pipe	1
43	0479	M8 P Nyloc Nut	2
44	0712	M8 C Washer	2

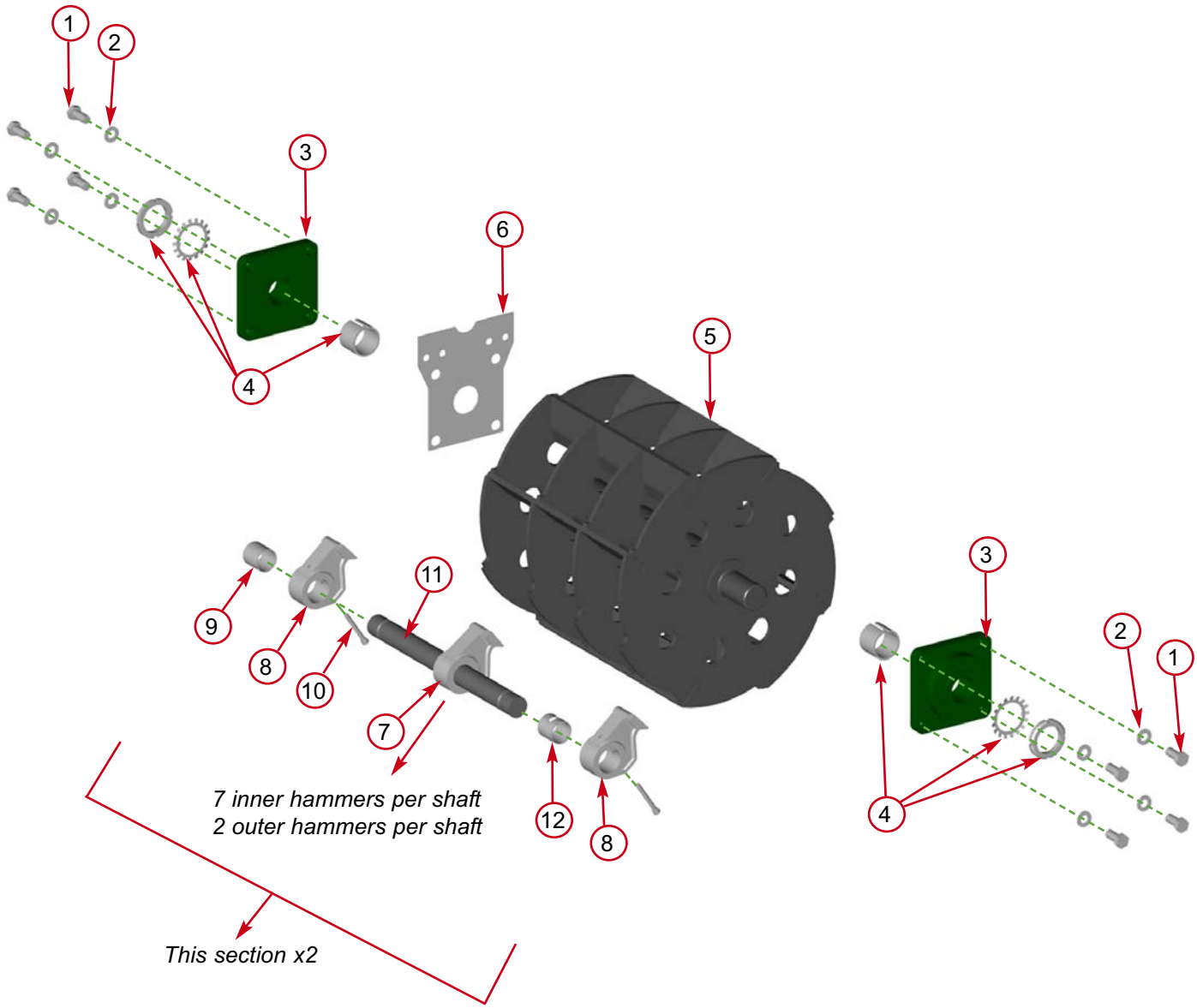

Date Last Modified: 7th July 09

Item	Part No	Part Name	Q'ty
1	1679	M16/40 Bolt	8
2	1143	M16 A Washer	8
3	17793	Bearings	2
4	18019	Adapter Sleeve Assy	2
5	18141F	Rotor Drum	1
6	18350PS	Bearing Shield	1

Item	Part No	Part Name	Q'ty
7	18072MH	Hammer Plain	14
8	18073MH	Hammer Retainer	4
9	18354	Hammer Bush Plain	14
10	18006	M8/70 Caphead	4
11	17616	Hammer Shaft	2
12	18355	Hammer Bush Cross Drilled	4

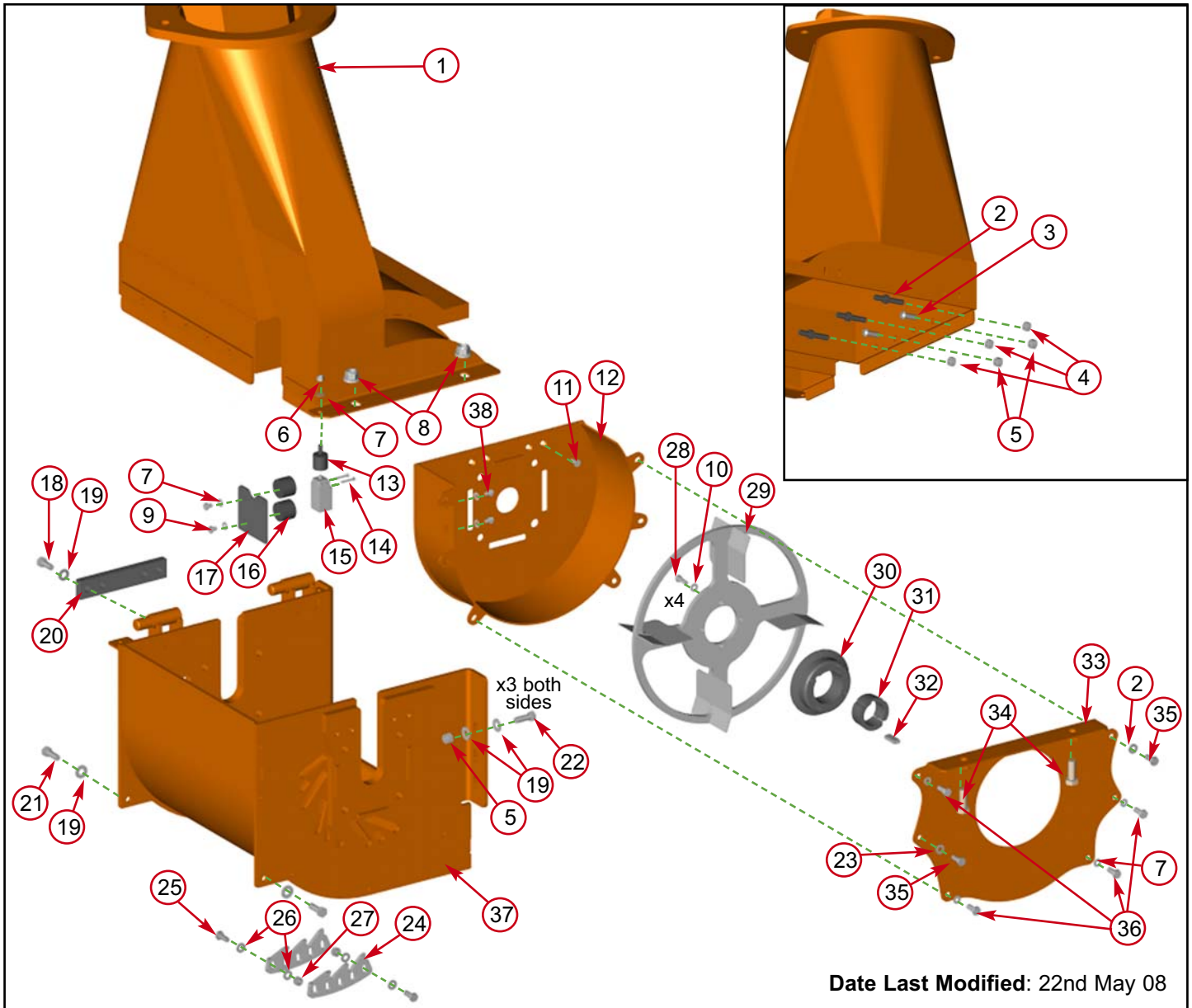

Date Last Modified: 22nd May 08

Item	Part No	Part Name	Q'ty
1	18425FO	Top Section Rotor Housing	1
2	18485	Catcher Finger	3
3	18484	M12/30 Button Head	2
4	0045	M12 T Nyloc Nut	3
5	0644	M12 P Nyloc Nut	8
6	0479	M8 P Nyloc Nut	1
7	0712	M8 C Washer	7
8	2978S	M16 Flange Nuts	2
9	1721	M8/10 Bolt	2
10	0711	M8 A Washer	4
11	0355	M8/16 Csk	4
12	18149FO	Lower Housing	1
13	0178	Rubber End Stop	1
14	1006	M4/30 Pan Pozi	2
15	1692	Limit Switch	1
16	1868	M8 AV Mount	2
17	18153PS	Switch Mounting Plate	1
18	1321	M12/30 Bolt	4
19	0704	M12 C Washer	18

Item	Part No	Part Name	Q'ty
20	18330MS	Side Brace	1
21	0429	M12/35 Bolt	2
22	0431	M12/40 Bolt	6
23	0702	M12 A Washer	2
24	18331PS	Catcher	2
25	4068	M10/40 Caphead	10
26	0701	M10 A Washer	20
27	0052	M10 T Nyloc Nut	10
28	0350	M8/25 Bolt	4
29	18143FS	Fan Assembly	1
30	18144M	Fan Hub	1
31	2850	Taper Lock 2012 50	1
32	18329	Key 22 x 14 x 9	1
33	18150FO	Fan Cover	1
34	18381	M16/45 Bolt	2
35	0277	M12/25 Bolt	2
36	0350	M8/25 Bolt	4
37	18167FO	Base Section Rotor Housing	1
38		M8/10 Csk Bolt	2

TIMBERWOLF V-BELT TENSIONING DATA TABLE

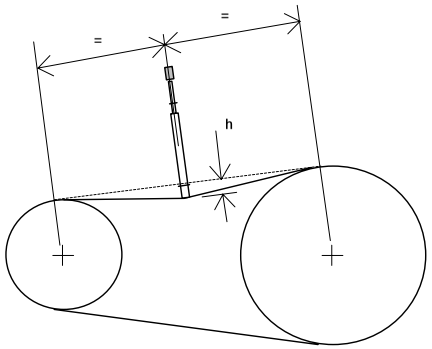

METHOD:

1. SET THE DEFLECTION DISTANCE ON THE LOWER SCALE OF THE TENSION GUAGE SO THAT THE UNDERSIDE OF THE 'O'-RING EQUALS THE 'h' VALUE GIVEN IN THE TABLE BELOW
2. ENSURE THAT THE DEFLECTION FORCE SCALE IS ZERO'D BY PUSHING THE UPPER 'O'-RING ALL THE WAY DOWN
3. PLACE THE TENSION GUAGE IN THE CENTRE OF THE BELT SPAN AS SHOWN IN THE DIAGRAM LEFT
4. PRESS DOWNWARDS ON THE RUBBER BUFFER, DEFLECTING THE BELT UNTIL THE UNDERSIDE OF THE LOWER O'-RING IS LEVEL WITH THE BELT BEHIND (USE A STRAIGHT EDGE IF THERE IS ONLY 1 BELT)
5. TAKE THE READING FROM THE DEFLECTION SCALE OF THE TENSION METER (READ AT THE LOWER EDGE OF THE 'O'-RING) & COMPARE THIS VALUE WITH THAT GIVEN IN THE TABLE BELOW
6. TIGHTEN OR LOOSEN BELTS AS REQUIRED FOLLOWING PROCEDURE GIVEN IN THE OPERATOR'S MANUAL

TENSION GUAGES ARE AVAILABLE FROM TIMBERWOLF SPARES, QUOTING PART No. 18091

TIPS ON BELT TIGHTENING:

A) THERE WILL NORMALLY BE A RAPID DROP IN TENSION DURING THE RUN-IN PERIOD FOR NEW BELTS. WHEN NEW BELTS ARE FITTED, CHECK THE TENSION EVERY 2-3 HOURS & ADJUST UNTIL THE TENSION REMAINS CONSTANT

B) THE BEST TENSION FOR V-BELT DRIVES IS THE LOWEST TENSION AT WHICH THE BELTS DO NOT SLIP OR RATCHET UNDER THE HIGHEST LOAD CONDITION

C) TOO MUCH TENSION SHORTENS BELT & BEARING LIFE

D) TOO LITTLE TENSION WILL AFFECT THE PERFORMANCE OF YOUR MACHINE ESPECIALLY IN RESPECT OF NO-STRESS DEVICES

E) ENSURE THAT BELT DRIVES ARE KEPT FREE OF ANY FOREIGN MATERIALS

F) IF A BELT SLIPS - TIGHTEN IT!

	TW MODEL No.:			13/75G	18/100G	125PH	150DH/DHB	150FTR	150VTR	190DH	190FTR	190TDH	190TFTR 190TVGTR	230TR	250DH	PTO100	PTO150	PTO300	S425/S426 SHREDDER
ROTOR BELTS	Belt Mfr / Type			Gates Super HC-MN	Gates Super HC-MN	Gates Super HC-MN	Gates Super HC-MN	Gates Super HC-MN	Gates Super HC-MN	Gates Super HC-MN	Gates Super HC-MN	Gates Super HC-MN	Gates Super HC-MN	Gates Super HC-MN	Gates Quad Power II	Gates Super HC-MN	Gates Super HC-MN	N/A	Gates Super HC-MN
	Belt Pitch Designation			SPA	SPA	SPA	SPA	SPA	SPA	SPA	SPA	SPA	SPA	SPB	XPB	SPA	SPA		SPB
	Belt Length			900.0	1060.0	1060.0	1060.0	1060.0	1060.0	1232.0	1232.0	1232.0	1232.0	1950.0	3350.0	900.0	900.0		2120.0
	Belt deflection	**=**	**h**	**4.0**	**4.0**	**4.0**	**4.0**	**4.0**	**4.0**	**4.0**	**4.0**	**4.0**	**4.0**	**6.0**	**10.0**	**4.0**	**4.0**		**8.0**
	Force reading (Kgf)	**New belt**		**3.4 - 3.6**	**3.1 - 3.3**	**3.0 - 3.2**	**4.3 - 4.5**	**4.3 - 4.5**	**4.3 - 4.5**	**3.3 - 3.5**	**3.3 - 3.5**	**3.9 - 4.1**	**3.9 - 4.1**	**3.4 - 3.6**	**3.5 - 3.7***	**3.3 - 3.5**	**3.8 - 4.0**		**3.3 - 3.5***
		Used belt		3.0 - 3.2	2.8 - 3.0	2.7 - 2.9	3.7 - 4.0	3.7 - 4.0	3.7 - 4.0	2.8 - 3.0	2.8 - 3.0	3.4 - 3.6	3.4 - 3.6	3.0 - 3.2	3.1 - 3.3*	2.9 - 3.0	3.3 - 3.5		2.9 - 3.1*
PUMP BELT	Belt Mfr / Type			N/A	N/A	Gates Super HC-MN	N/A	Gates Super HC-MN	Gates Super HC-MN	N/A	Gates Super HC-MN	N/A	Gates Super HC-MN	Gates Super HC-MN	N/A	N/A	Gates Super HC-MN	Gates Super HC-MN	N/A
	Belt Pitch Designation					SPA		SPA	SPA		SPA		SPA	SPA			SPA	SPA	
	Belt Length					950.0		900.0	900.0		925.0		925.0	950.0			950.0	1000.0	
	Belt deflection	**=**	**h**			**4.0**		**4.0**	**4.0**		**4.0**		**4.0**	**4.0**			**4.0**	**4.0**	
	Force reading (Kgf) Ver 2.0 - 12-10-07	**New belt**				**1.9 - 2.0**		**2.3 - 2.4**	**2.3 - 2.4**		**2.3 - 2.4**		**2.3 - 2.4**	**1.5 - 1.6**			**2.0 - 2.2**	**1.9 - 2.0**	
		Used belt				1.7 - 1.8		2.0 - 2.1	2.0 - 2.1		2.0 - 2.2		2.0 - 2.2	1.3 - 1.4			1.8 - 2.0	1.7 - 1.8	

* DUE TO THE EXTENDED BELT SPAN LENGTHS ON THE 250DH & S425/S426 SHREDDER, THE FORCE READINGS ARE INCREASED BY 0.5Kgf OVER THE DESIGN IQ OUTPUTS